ADDISON®

RCA-SERIES

100% OUTSIDE AIR SPLIT SYSTEM OUTDOOR CONDENSING UNITS PAIRED WITH MATCHED AIR HANDLER

DIMENSION AND SELECTION GUIDE

www.addison-hvac.com +1.407.292.4400

C ETL LISTED CM US
Intertek

UNIT DATA - RCA051 WITH HCA051 / VCA051

RATED AT 95 °F DB / 78 °F WB ENTERING AIR TEMPERATURE.

PERFORMANCE DATA	NET COOLING	Total Capacity (Btu/h)	45,500			
		Sensible Capacity (Btu/h)	23,842			
		Electric Power (W)	3,707			
		Leaving Air Temperature (°F db / °F wb)	52.2 / 51.6			
		Moisture Removal (lbs/hr)	17.4			
		Energy Efficiency Ratio (EER)	12.2			
		Nominal Airflow (CFM)	500			
ELECTRICAL DATA	COMPRESSOR(S)	Qty-Nominal Tons-Type	1 - 3.5 - Scroll			
		Capacity Reduction	0/50/100 (HGBP) or 0/10-100 (Digital)			
		Electric Supply (V/Phase/Hz)	230/1/60	208-230/3/60	460/3/60	575/3/60
		Run Load Amps (RLA)	21.8	13.7	6.2	4.8
		Locked Rotor Amps (LRA)	117	83	41	33
	CONDENSER FAN MOTOR(S)	Qty - Horsepower (HP)	1 - 1/2			
		FLA (ea)	6.2	5.4	2.7	1.3
		Type	PSC			
	UNIT	Unit Minimum Circuit Ampacity	33.5	22.5	10.5	7.3
		Max. Time Delay Fuse or HACR Breaker	50	35	15	15
MECHANICAL DATA	CONDENSER FAN(S)	Airflow (CFM)	4,000			
		Diameter (in)-Pitch (deg)	24 - 36			
	CONDENSER COIL(S)	Quantity	2			
		Tube Material - Fin Material	Copper - Aluminum			
		Face Area (sq. ft.)	15.4			
		Rows - Fins per Inch	4 - 12			
	REFRIGERANT CONNECTION(S)	Suction Line (in OD)	$^{3}/_{4}$ (Qty 1)			
		Liquid Line (in OD)	$^{1}/_{2}$ (Qty 1)			
		Optional Hot Gas Bypass (in OD)	$^{3}/_{8}$ (Qty 1)			
		Optional Hot Gas Reheat (in OD)	$^{3}/_{8}$ (Qty 1)			
	CABINET	Sheet Metal	G90 Galvanized			
		Finish	Polyester Coating			
		Top Pan Thickness (ga)	16			
		Sides and Panels Thickness (ga)	18			
		Bottom Pan Thickness (ga)	16			
	REFRIGERANT - R410A	Charge based on 25' line set (lbs per circuit)	24			
	WEIGHTS	Unit Weight (lbs)	565			
		Shipping Weight (lbs)	615			

NOTES: 1. Refrigerant connections are actual connection sizes at unit. For line sizing, see "Reference Information" tables on pages 22 - 23.

			ENTERING AIR TEMPERATURE (°F)								
			90 DB			95 DB			100 DB		
	CFM		76 WB	78 WB	80 WB	76 WB	78 WB	80 WB	76 WB	78 WB	80 WB
COOLING	400	Total Capacity (Btu/h)	41,195	42,774	44,350	40,590	42,103	43,697	39,924	41,473	42,980
		Sensible Capacity (Btu/h)	21,018	20,047	19,035	22,938	21,965	20,985	24,797	23,825	22,898
		Electric Power (Watts)	3,333	3,323	3,323	3,519	3,524	3,521	3,720	3,711	3,734
		Leaving Air Temperature (°F db/°F wb)	48.1 /48.0	47.7 / 47.5	48.0 / 47.8	48.5 / 48.2	46.1 /46.0	48.6 / 48.4	46.8 / 46.6	46.8 /46.6	49.2 / 49.0
	500	Total Capacity (Btu/h)	45,263	46,872	48,532	44,498	46,117	47,760	43,658	45,286	46,927
		Sensible Capacity (Btu/h)	23,254	22,013	20,732	25,400	24,462	23,214	28,092	26,894	25,644
		Electric Power (W)	3,327	3,332	3,335	3,525	3,525	3,530	3,737	3,736	3,737
		Leaving Air Temperature (°F db/°F wb)	48.7/48.5	51.1 / 51.0	53.5 /53.0	49.2 / 49.0	51.6 /51.0	54.0 / 53.8	49.9 /49.5	52.2 / 52.0	54.5 / 54.2
	600	Total Capacity (Btu/h)	48,273	49,947	51,673	47,405	49,081	50,791	46,461	48,142	49,848
		Sensible Capacity (Btu/h)	25,237	23,736	22,208	28,179	26,738	25,248	31,135	29,714	28,244
		Electric Power (W)	3,336	3,340	3,341	3,530	3,534	3,539	3,737	3,742	3,747
		Leaving Air Temperature (°F db/°F wb)	52.7 / 52.0	55.0 / 54.8	57.4 /57.0	53.2 / 53.0	55.5 / 55.2	57.9 /57.6	53.6 / 53.3	56.0 / 55.8	58.3 / 58.0

NOTES: Above performance assumes ambient temperature is equal to entering air temperature and reflects gross capacities.

UNIT DATA - RCA061 WITH HCA071 / VCA071

RATED AT 95 °F DB / 78 °F WB ENTERING AIR TEMPERATURE.

PERFORMANCE DATA	NET COOLING	Total Capacity (Btu/h)	58,100			
		Sensible Capacity (Btu/h)	31,110			
		Electric Power (W)	4,547			
		Leaving Air Temperature (°F db / °F wb)	55.1 / 54.6			
		Moisture Removal (lbs/hr)	26.5			
		Energy Efficiency Ratio (EER)	12.7			
		Nominal Airflow (CFM)	700			
ELECTRICAL DATA	COMPRESSOR(S)	Qty-Nominal Tons-Type	1 - 4.5 - Scroll			
		Capacity Reduction	0/50/100 (HGBP) or 0/10-100 (Digital)			
		Electric Supply (V/Phase/Hz)	230/1/60	208-230/3/60	460/3/60	575/3/60
		Run Load Amps (RLA)	26.4	16.0	7.8	7.6
		Locked Rotor Amps (LRA)	134	110	52	54
	CONDENSER FAN MOTOR(S)	Qty - Horsepower (HP)	1 - 1/2			
		FLA (ea)	6.2	5.4	2.7	1.3
		Type	PSC			
	UNIT	Unit Minimum Circuit Ampacity	39.2	25.3	12.3	8.4
		Max. Time Delay Fuse or HACR Breaker	60	40	20	15
MECHANICAL DATA	CONDENSER FAN(S)	Airflow (CFM)	4,000			
		Diameter (in)-Pitch (deg)	24 - 36			
	CONDENSER COIL(S)	Quantity	2			
		Tube Material - Fin Material	Copper - Aluminum			
		Face Area (sq. ft.)	15.4			
		Rows - Fins per Inch	4 - 12			
	REFRIGERANT CONNECTION(S)	Suction Line (in OD)	$^{7}/_{8}$ (Qty 1)			
		Liquid Line (in OD)	$^{1}/_{2}$ (Qty 1)			
		Optional Hot Gas Bypass (in OD)	$^{3}/_{8}$ (Qty 1)			
		Optional Hot Gas Reheat (in OD)	$^{3}/_{8}$ (Qty 1)			
	CABINET	Sheet Metal	G90 Galvanized			
		Finish	Polyester Coating			
		Top Pan Thickness (ga)	16			
		Sides and Panels Thickness (ga)	18			
		Bottom Pan Thickness (ga)	16			
	REFRIGERANT - R410A	Charge based on 25' line set (lbs per circuit)	24			
	WEIGHTS	Unit Weight (lbs)	590			
		Shipping Weight (lbs)	640			

NOTES: 1. Refrigerant connections are actual connection sizes at unit. For line sizing, see "Reference Information" tables on pages 22 - 23.

			ENTERING AIR TEMPERATURE (°F)								
			90 DB			95 DB			100 DB		
	CFM		76 WB	78 WB	80 WB	76 WB	78 WB	80 WB	76 WB	78 WB	80 WB
COOLING	600	Total Capacity (Btu/h)	55,034	56,938	58,886	54,085	55,993	57,941	53,080	54,983	56,919
		Sensible Capacity (Btu/h)	28,242	26,724	25,154	31,143	29,659	28,121	34,022	32,555	31,048
		Electric Power (W)	4,010	4,027	4,046	4,250	4,264	4,280	4,500	4,515	4,532
		Leaving Air Temperature (°F db/°F wb)	47.8 / 47.5	50.2 / 50.0	52.7 / 52.0	48.4 / 48.2	50.8 / 50.5	53.2 / 53.0	49.0 / 48.8	51.3 / 51.0	53.8 / 53.4
	700	Total Capacity (Btu/h)	58,097	60,046	62,038	57,061	59,015	60,969	55,912	57,861	59,826
		Sensible Capacity (Btu/h)	30,216	28,422	26,620	33,662	31,909	30,130	37,050	35,335	33,597
		Electric Power (W)	4,042	4,059	4,076	4,276	4,293	4,311	4,525	4,542	4,561
		Leaving Air Temperature (°F db/°F wb)	51.3 / 51.0	53.7 / 53.5	56.2 / 56.0	51.8 / 51.5	54.2 / 54.0	56.6 / 56.4	52.4 / 52.0	54.7 / 54.5	57.1 / 57.0
	800	Total Capacity (Btu/h)	60,541	62,513	64,512	59,414	61,375	63,329	58,150	60,123	62,021
		Sensible Capacity (Btu/h)	32,048	30,030	27,951	36,042	34,058	32,002	39,966	38,026	35,956
		Electric Power (W)	4,065	4,083	4,100	4,299	4,317	4,334	4,546	4,566	4,581
		Leaving Air Temperature (°F db/°F wb)	54.1 / 54.0	56.5 / 56.4	58.9 / 58.4	54.6 / 54.3	56.9 / 56.6	59.3 / 59.0	55.0 / 54.7	57.4 / 57.0	59.8 / 59.5

NOTES: Above performance assumes ambient temperature is equal to entering air temperature and reflects gross capacities.

UNIT DATA - RCA071 WITH HCA081 / VCA081

RATED AT 95 °F DB / 78 °F WB ENTERING AIR TEMPERATURE.

PERFORMANCE DATA	NET COOLING	Total Capacity (Btu/h)	74,500		
		Sensible Capacity (Btu/h)	39,876		
		Electric Power (W)	6,601		
		Leaving Air Temperature (°F db / °F wb)	55.3 / 54.7		
		Moisture Removal (lbs/hr)	32.7		
		Energy Efficiency Ratio (EER)	11.2		
		Nominal Airflow (CFM)	900		
ELECTRICAL DATA	COMPRESSOR(S)	Qty-Nominal Tons-Type	1 - 6.3 - Scroll		
		Capacity Reduction	0/50/100 (HGBP) or 0/10-100 (Digital)		
		Electric Supply (V/Phase/Hz)	208-230/3/60	460/3/60	575/3/60
		Run Load Amps (RLA)	23.2	11.2	7.7
		Locked Rotor Amps (LRA)	164	75	54
	CONDENSER FAN MOTOR(S)	Qty - Horsepower (HP)	1 - 1/2		
		FLA (ea)	5.4	2.7	1.3
		Type	PSC		
	UNIT	Unit Minimum Circuit Ampacity	34.4	16.7	11.2
		Max. Time Delay Fuse or HACR Breaker	50	25	15
MECHANICAL DATA	CONDENSER FAN(S)	Airflow (CFM)	4,000		
		Diameter (in)-Pitch (deg)	24 - 36		
	CONDENSER COIL(S)	Quantity	2		
		Tube Material - Fin Material	Copper - Aluminum		
		Face Area (sq. ft.)	15.4		
		Rows - Fins per Inch	4 - 12		
	REFRIGERANT CONNECTION(S)	Suction Line (in OD)	$^{7}/_{8}$ (Qty 1)		
		Liquid Line (in OD)	$^{1}/_{2}$ (Qty 1)		
		Optional Hot Gas Bypass (in OD)	$^{3}/_{8}$ (Qty 1)		
		Optional Hot Gas Reheat (in OD)	$^{1}/_{2}$ (Qty 1)		
	CABINET	Sheet Metal	G90 Galvanized		
		Finish	Polyester Coating		
		Top Pan Thickness (ga)	16		
		Sides and Panels Thickness (ga)	18		
		Bottom Pan Thickness (ga)	16		
	REFRIGERANT - R410A	Charge based on 25' line set (lbs per circuit)	25		
	WEIGHTS	Unit Weight (lbs)	610		
		Shipping Weight (lbs)	660		

NOTES: 1. Refrigerant connections are actual connection sizes at unit. For line sizing, see "Reference Information" tables on pages 22 - 23.

			ENTERING AIR TEMPERATURE (°F)								
			90 DB			95 DB			100 DB		
	CFM		76 WB	78 WB	80 WB	76 WB	78 WB	80 WB	76 WB	78 WB	80 WB
COOLING	800	Total Capacity (Btu/h)	71,715	74,026	76,405	70,544	72,872	75,208	69,212	71,581	73,917
		Sensible Capacity (Btu/h)	36,905	34,796	32,648	40,825	38,762	36,643	44,616	42,659	40,586
		Electric Power (W)	5,871	5,909	5,949	6,182	6,223	6,263	6,509	6,552	6,594
		Leaving Air Temperature (°F db/°F wb)	53.9 / 53.0	51.4 / 51.0	48.9 / 48.5	54.8 / 54.5	52.3 / 52.0	50.0 / 49.7	54.3 /54.0	51.8 / 51.4	49.4 / 49.1
	900	Total Capacity (Btu/h)	74,509	76,857	79,255	73,251	75,596	77,956	71,834	74,180	76,553
		Sensible Capacity (Btu/h)	38,767	36,399	34,025	43,231	40,912	38,568	47,613	45,345	43,053
		Electric Power (W)	5,921	5,961	6,001	6,233	6,274	6,315	6,561	6,602	6,645
		Leaving Air Temperature (°F db/°F wb)	56.5 / 56.2	54.0 / 53.7	51.6 / 51.4	57.3 / 57.0	54.9 / 54.4	52.5 /52.0	56.9 /56.6	54.4 / 54.2	52.0 / 51.7
	1,000	Total Capacity (Btu/h)	76,846	79,210	81,610	75,483	77,856	80,246	74,000	76,311	78,724
		Sensible Capacity (Btu/h)	40,543	37,959	35,305	45,548	43,017	40,407	50,488	47,982	45,433
		Electric Power (W)	5,964	6,004	6,045	6,275	6,316	6,358	6,604	6,643	6,688
		Leaving Air Temperature (°F db/°F wb)	58.6 / 58.2	56.2 / 56.0	53.8 / 53.5	59.4 / 59.1	57.0 / 56.7	54.6 / 54.1	59.0 / 58.8	56.6 / 56.3	54.2 / 54.0

NOTES: Above performance assumes ambient temperature is equal to entering air temperature and reflects gross capacities.

UNIT DATA - RCA101 WITH HCA101 / VCA101

RATED AT 95 °F DB / 78 °F WB ENTERING AIR TEMPERATURE.

PERFORMANCE DATA	NET COOLING	Total Capacity (Btu/h)	113,700		
		Sensible Capacity (Btu/h)	61,031		
		Electric Power (W)	9,851		
		Leaving Air Temperature (°F db / °F wb)	55.9 / 55.2		
		Moisture Removal (lbs/hr)	48.8		
		Energy Efficiency Ratio (EER)	11.5		
		Nominal Airflow (CFM)	1,400		
ELECTRICAL DATA	COMPRESSOR(S)	Qty-Nominal Tons-Type	1 - 9.0 - Scroll		
		Capacity Reduction	0/50/100 (HGBP) or 0/10-100 (Digital)		
		Electric Supply (V/Phase/Hz)	208-230/3/60	460/3/60	575/3/60
		Run Load Amps (RLA)	30.1	16.7	12.2
		Locked Rotor Amps (LRA)	225	114	80
	CONDENSER FAN MOTOR(S)	Qty - Horsepower (HP)	1 - 1		
		FLA (ea)	5.4	2.7	2.0
		Type	PSC		
	UNIT	Unit Minimum Circuit Ampacity	41.6	23.1	19.3
		Max. Time Delay Fuse or HACR Breaker	70	35	30
MECHANICAL DATA	CONDENSER FAN(S)	Airflow (CFM)	6,200		
		Diameter (in)-Pitch (deg)	26 - 26		
	CONDENSER COIL(S)	Quantity	3		
		Tube Material - Fin Material	Copper - Aluminum		
		Face Area (sq. ft.)	23.1		
		Rows - Fins per Inch	4 - 12		
	REFRIGERANT CONNECTION(S)	Suction Line (in OD)	$1\,^{1}/_{8}$ (Qty 1)		
		Liquid Line (in OD)	$^{5}/_{8}$ (Qty 1)		
		Optional Hot Gas Bypass (in OD)	$^{1}/_{2}$ (Qty 1)		
		Optional Hot Gas Reheat (in OD)	$^{5}/_{8}$ (Qty 1)		
	CABINET	Sheet Metal	G90 Galvanized		
		Finish	Polyester Coating		
		Top Pan Thickness (ga)	16		
		Sides and Panels Thickness (ga)	18		
		Bottom Pan Thickness (ga)	16		
	REFRIGERANT - R410A	Charge based on 25' line set (lbs per circuit)	30		
	WEIGHTS	Unit Weight (lbs)	825		
		Shipping Weight (lbs)	900		

NOTES: 1. Refrigerant connections are actual connection sizes at unit. For line sizing, see "Reference Information" tables on pages 22 - 23.

			ENTERING AIR TEMPERATURE (°F)								
			90 DB			95 DB			100 DB		
	CFM		76 WB	78 WB	80 WB	76 WB	78 WB	80 WB	76 WB	78 WB	80 WB
COOLING	1,200	Total Capacity (Btu/h)	108,069	111,692	115,411	106,346	109,991	113,640	104,529	108,118	111,729
		Sensible Capacity (Btu/h)	55,585	52,482	49,306	61,478	58,442	55,306	67,309	64,296	61,227
		Electric Power (W)	8,712	8,774	8,840	9,170	9,234	9,300	9,660	9,720	9,786
		Leaving Air Temperature (°F db/°F wb)	48.7 \ 48.5	51.1 / 50.8	53.6 / 53.3	49.2 / 49.0	51.6/ 51.2	54.0 / 53.8	49.7 / 49.6	52.1 / 51.9	54.5 \ 54.2
	1,400	Total Capacity (Btu/h)	113,752	117,438	121,203	111,832	115,444	119,194	109,740	113,373	117,006
		Sensible Capacity (Btu/h)	59,366	55,750	52,109	66,297	62,764	59,180	73,216	69,748	66,140
		Electric Power (W)	8,818	8,885	8,955	9,274	9,341	9,412	9,761	9828	9,894
		Leaving Air Temperature (°F db/°F wb)	52.1 / 52.0	54.6 / 54.4	57.0 / 56.7	52.6 /52.3	55.0 / 54.8	57.4/ 57.2	53.1 / 52.7	55.4 / 55.0	57.9 \ 57.5
	1,600	Total Capacity (Btu/h)	118,212	121,911	125,653	116,081	119,755	123,503	113,804	117,425	121,033
		Sensible Capacity (Btu/h)	62,925	58,832	54,592	71,001	66,953	62,829	78,964	74,969	70,775
		Electric Power (W)	8,904	8,974	9,047	9,362	9,432	9,503	9,843	9,912	9,981
		Leaving Air Temperature (°F db/°F wb)	54.9 / 54.4	57.3 / 57.0	59.7 / 59.6	55.3 / 55.0	57.6 / 57.4	60.0 / 58.7	55.7 / 55.5	58.1 / 57.7	60.4 / 60.1

NOTES: Above performance assumes ambient temperature is equal to entering air temperature and reflects gross capacities.

UNIT DATA - RCA141 WITH HCA081 / VCA081

RATED AT 95 °F DB / 78 °F WB ENTERING AIR TEMPERATURE.

PERFORMANCE DATA	NET COOLING	Total Capacity (Btu/h)	123,100		
		Sensible Capacity (Btu/h)	67,112		
		Electric Power (W)	12,545		
		Leaving Air Temperature (°F db / °F wb)	57.4 / 56.7		
		Moisture Removal (lbs/hr)	50.7		
		Energy Efficiency Ratio (EER)	9.8		
		Nominal Airflow (CFM)	1,600		
ELECTRICAL DATA	COMPRESSOR(S)	Qty-Nominal Tons-Type	1 - 12.0 - Scroll		
		Capacity Reduction	0/50/100 (HGBP) or 0/10-100 (Digital)		
		Electric Supply (V/Phase/Hz)	208-230/3/60	460/3/60	575/3/60
		Run Load Amps (RLA)	48.1	18.6	14.7
		Locked Rotor Amps (LRA)	245	125	100
	CONDENSER FAN MOTOR(S)	Qty - Horsepower (HP)	1 - 1		
		FLA (ea)	5.4	2.7	2.0
		Type	PSC		
	UNIT	Unit Minimum Circuit Ampacity	64.0	25.4	22.4
		Max. Time Delay Fuse or HACR Breaker	110	40	35
MECHANICAL DATA	CONDENSER FAN(S)	Airflow (CFM)	6,200		
		Diameter (in)-Pitch (deg)	26 - 26		
	CONDENSER COIL(S)	Quantity	3		
		Tube Material - Fin Material	Copper - Aluminum		
		Face Area (sq. ft.)	23.1		
		Rows - Fins per Inch	4 - 12		
	REFRIGERANT CONNECTION(S)	Suction Line (in OD)	$1\frac{3}{8}$ (Qty 1)		
		Liquid Line (in OD)	$\frac{5}{8}$ (Qty 1)		
		Optional Hot Gas Bypass (in OD)	$\frac{1}{2}$ (Qty 1)		
		Optional Hot Gas Reheat (in OD)	$\frac{5}{8}$ (Qty 1)		
	CABINET	Sheet Metal	G90 Galvanized		
		Finish	Polyester Coating		
		Top Pan Thickness (ga)	16		
		Sides and Panels Thickness (ga)	18		
		Bottom Pan Thickness (ga)	16		
	REFRIGERANT - R410A	Charge based on 25' line set (lbs per circuit)	35		
	WEIGHTS	Unit Weight (lbs)	900		
		Shipping Weight (lbs)	975		

NOTES: 1. Refrigerant connections are actual connection sizes at unit. For line sizing, see "Reference Information" tables on pages 22 - 23.

			ENTERING AIR TEMPERATURE (°F)								
			90 DB			95 DB			100 DB		
	CFM		76 WB	78 WB	80 WB	76 WB	78 WB	80 WB	76 WB	78 WB	80 WB
COOLING	1,400	Total Capacity (Btu/h)	118,849	122,420	126108	116,934	120,412	124,002	114,870	118,371	122,092
		Sensible Capacity (Btu/h)	61,598	57,817	54,051	68,550	64,730	60,994	74,315	71,741	68,146
		Electric Power (W)	11,177	11,250	11,327	11,777	11,848	11,925	12,408	12,483	12,569
		Leaving Air Temperature (°F db/°F wb)	53.7 / 53.7	53.9 / 53.3	56.4 / 56.0	56.7 / 56.0	58.1 / 57.8	59.0 / 59.0	55.5 / 54.6	57.6 / 56.9	56.7 / 56.6
	1,600	Total Capacity (Btu/h)	123,373	126,966	130652	121,336	125,091	128,728	120,685	122,475	127,940
		Sensible Capacity (Btu/h)	64,973	60,745	56432	73,022	69,029	64,777	79,920	75,157	73,227
		Electric Power (W)	11,276	11,351	11,429	11,876	11,962	12,041	12,551	12,582	12,698
		Leaving Air Temperature (°F db/°F wb)	56.4 / 56.3	56.3 / 56.1	59.0 / 58.5	57.4 / 56.7	59.1 / 59.1	59.1 /58.9	58.0 / 56.8	57.8 / 56.9	59.5 / 59.3
	1,800	Total Capacity (Btu/h)	127,093	130,686	134351	125,097	128,549	132,429	123,995	127,802	129,535
		Sensible Capacity (Btu/h)	68,341	63,586	58,832	75,767	71,655	68,352	84,025	80,120	75,164
		Electric Power (W)	11,361	11,437	11,515	11,968	12,041	12,132	12,629	12,716	12,750
		Leaving Air Temperature (°F db/°F wb)	58.4 / 58.4	58.5 / 58.4	60.9 / 60.0	57.3 / 56.3	58.8 / 58.7	61.3 / 61.1	58.1 / 56.7	60.3 59.1	62.3 / 61.5

NOTES: Above performance assumes ambient temperature is equal to entering air temperature and reflects gross capacities.

UNIT DATA - RCA141 WITH HCA141 / VCA141

RATED AT 95 °F DB / 78 °F WB ENTERING AIR TEMPERATURE.

PERFORMANCE DATA	NET COOLING	Total Capacity (Btu/h)	140,400		
		Sensible Capacity (Btu/h)	75,120		
		Electric Power (W)	13,010		
		Leaving Air Temperature (°F db / °F wb)	55.4 / 54.8		
		Moisture Removal (lbs/hr)	61.8		
		Energy Efficiency Ratio (EER)	10.7		
		Nominal Airflow (CFM)	1,700		
ELECTRICAL DATA	COMPRESSOR(S)	Qty-Nominal Tons-Type	1 - 12.0 - Scroll		
		Capacity Reduction	0/50/100 (HGBP) or 0/10-100 (Digital)		
		Electric Supply (V/Phase/Hz)	208-230/3/60	460/3/60	575/3/60
		Run Load Amps (RLA)	48.1	18.6	14.7
		Locked Rotor Amps (LRA)	245	125	100
	CONDENSER FAN MOTOR(S)	Qty - Horsepower (HP)	1 - 1		
		FLA (ea)	5.4	2.7	2.0
		Type	PSC		
	UNIT	Unit Minimum Circuit Ampacity	64.0	25.4	22.4
		Max. Time Delay Fuse or HACR Breaker	110	40	35
MECHANICAL DATA	CONDENSER FAN(S)	Airflow (CFM)	6,200		
		Diameter (in)-Pitch (deg)	26 - 26		
	CONDENSER COIL(S)	Quantity	3		
		Tube Material - Fin Material	Copper - Aluminum		
		Face Area (sq. ft.)	23.1		
		Rows - Fins per Inch	4 - 12		
	REFRIGERANT CONNECTION(S)	Suction Line (in OD)	$1^{3}/_{8}$ (Qty 1)		
		Liquid Line (in OD)	$^{5}/_{8}$ (Qty 1)		
		Optional Hot Gas Bypass (in OD)	$^{1}/_{2}$ (Qty 1)		
		Optional Hot Gas Reheat (in OD)	$^{5}/_{8}$ (Qty 1)		
	CABINET	Sheet Metal	G90 Galvanized		
		Finish	Polyester Coating		
		Top Pan Thickness (ga)	16		
		Sides and Panels Thickness (ga)	18		
		Bottom Pan Thickness (ga)	16		
	REFRIGERANT - R410A	Charge based on 25' line set (lbs per circuit)	38		
	WEIGHTS	Unit Weight (lbs)	900		
		Shipping Weight (lbs)	975		

NOTES: 1. Refrigerant connections are actual connection sizes at unit. For line sizing, see "Reference Information" tables on pages 22 - 23.

			ENTERING AIR TEMPERATURE (°F)								
			90 DB			95 DB			100 DB		
	CFM		76 WB	78 WB	80 WB	76 WB	78 WB	80 WB	76 WB	78 WB	80 WB
COOLING	1,500	Total Capacity (Btu/h)	135,256	139,504	143,859	132,970	137,212	141,497	130,524	134,721	138,979
		Sensible Capacity (Btu/h)	69,560	65,553	61,464	76,865	72,932	68,905	84,074	80,201	76,256
		Electric Power (W)	11,555	11,649	11,747	12,163	12,257	12,357	12,801	12,893	12,996
		Leaving Air Temperature (°F db/°F wb)	48.6 / 48.2	51.1 / 50.7	53.7 / 53.5	49.1 / 48.8	51.6 / 51.0	54.1 / 53.8	49.7/ 49.5	52.1/ 52.0	54.6 / 54.3
	1,700	Total Capacity (Btu/h)	140,709	144,981	149,368	138,204	142,495	146,770	135,462	139,672	144,059
		Sensible Capacity (Btu/h)	73,214	68,674	64,137	81,590	77,155	72,663	89,841	85,473	81,113
		Electric Power (W)	11,687	11,784	11,884	12,290	12,391	12,493	12,927	13,029	13,131
		Leaving Air Temperature (°F db/°F wb)	51.5 /51.3	54.0 / 53.7	56.5 / 56.1	52.0 / 51.7	54.4 / 54.0	56.9 / 56.6	52.5 / 52.1	54.9 / 54.7	57.4 / 57.0
	1,900	Total Capacity (Btu/h)	145,142	149,470	153,816	142,457	146,763	151,084	139,527	143,818	148,113
		Sensible Capacity (Btu/h)	76,674	71,714	66,610	86,148	81,276	76,256	95,493	90,710	85,783
		Electric Power (W)	11,796	11,896	11,997	12,398	12,502	12,606	13,036	13,141	13,242
		Leaving Air Temperature (°F db/°F wb)	53.9 / 53.4	56.3 / 56.0	58.8 / 58.5	54.3 / 54.0	56.7 / 56.4	59.2 / 59.0	54.8 / 54.5	57.2 /57.0	59.6 /59.4

NOTES: Above performance assumes ambient temperature is equal to entering air temperature and reflects gross capacities.

UNIT DATA - RCA171 WITH HCA141 / VCA141

RATED AT 95 °F DB / 78 °F WB ENTERING AIR TEMPERATURE.

PERFORMANCE DATA	NET COOLING	Total Capacity (Btu/h)	164,300		
		Sensible Capacity (Btu/h)	88,105		
		Electric Power (W)	14,185		
		Leaving Air Temperature (°F db / °F wb)	55.5 / 54.9		
		Moisture Removal (lbs/hr)	69.7		
		Energy Efficiency Ratio (EER)	11.6		
		Nominal Airflow (CFM)	2,000		
ELECTRICAL DATA	COMPRESSOR(S)	Qty-Nominal Tons-Type	1 - 13.5 - Scroll		
		Capacity Reduction	0/50/100 (HGBP) or 0/10-100 (Digital)		
		Electric Supply (V/Phase/Hz)	208-230/3/60	460/3/60	575/3/60
		Run Load Amps (RLA)	51.3	23.1	19.9
		Locked Rotor Amps (LRA)	300	150	109
	CONDENSER FAN MOTOR(S)	Qty - Horsepower (HP)	2 - 1		
		FLA (ea)	3.4 / 5.4	1.7 / 2.7	2.0/2.0
		Type	PSC		
	UNIT	Unit Minimum Circuit Ampacity	74.8	33.4	28.9
		Max. Time Delay Fuse or HACR Breaker	125	50	45
MECHANICAL DATA	CONDENSER FAN(S)	Airflow (CFM)	12,400		
		Diameter (in)-Pitch (deg)	26 - 32		
	CONDENSER COIL(S)	Quantity	4		
		Tube Material - Fin Material	Copper - Aluminum		
		Face Area (sq. ft.)	30.8		
		Rows - Fins per Inch	4 - 12		
	REFRIGERANT CONNECTION(S)	Suction Line (in OD)	$1\frac{3}{8}$ (Qty 1)		
		Liquid Line (in OD)	$\frac{7}{8}$ (Qty 1)		
		Optional Hot Gas Bypass (in OD)	$\frac{5}{8}$ (Qty 1)		
		Optional Hot Gas Reheat (in OD)	$\frac{5}{8}$ (Qty 1)		
	CABINET	Sheet Metal	G90 Galvanized		
		Finish	Polyester Coating		
		Top Pan Thickness (ga)	16		
		Sides and Panels Thickness (ga)	18		
		Bottom Pan Thickness (ga)	16		
	REFRIGERANT - R410A	Charge based on 25' line set (lbs per circuit)	50		
	WEIGHTS	Unit Weight (lbs)	1,250		
		Shipping Weight (lbs)	1,345		

NOTES: 1. Refrigerant connections are actual connection sizes at unit. For line sizing, see "Reference Information" tables on pages 22 - 23.

			ENTERING AIR TEMPERATURE (°F)								
			90 DB			95 DB			100 DB		
	CFM		76 WB	78 WB	80 WB	76 WB	78 WB	80 WB	76 WB	78 WB	80 WB
COOLING	1,800	Total Capacity (Btu/h)	159,205	164,255	169,439	156,567	161,636	166,729	153,665	158,657	163,808
		Sensible Capacity (Btu/h)	82,057	77,281	72,431	90,887	86,212	81,425	99,570	94,920	90,333
		Electric Power (W)	12,677	12,745	12,816	13,308	13,378	13,450	13,974	14,046	14,121
		Leaving Air Temperature (°F db/°F wb)	49.3 / 49.0	51.8 /51.5	54.3 / 54.0	49.8 / 49.7	52.3 / 52.0	54.8 / 54.5	50.4 / 50.0	52.8 / 52.3	55.2 / 55.0
	2,000	Total Capacity (Btu/h)	164,579	169,670	174,959	161,764	166,835	171,998	158,624	163,726	168,847
		Sensible Capacity (Btu/h)	85,715	80,424	75,152	95,631	90,443	85,224	105,379	100,316	95,181
		Electric Power (W)	12,753	12,824	12,899	13,383	13,455	13,530	14,047	14,117	14,198
		Leaving Air Temperature (°F db/°F wb)	51.7 /51.0	54.2 / 54.0	56.6 56.4	52.2 / 52.0	54.6 / 54.0	57.0 / 56.8	52.7 / 52.4	55.1 / 54.8	57.5 / 57.2
	2,200	Total Capacity (Btu/h)	169,127	174,255	179,532	166,079	171,232	176,436	162,859	167,897	173,051
		Sensible Capacity (Btu/h)	89,222	83,506	77,669	100,214	94,617	88,857	111,097	105,566	99,899
		Electric Power (W)	12,820	12,893	12,970	13,446	13,522	13,599	14,112	14,182	14,265
		Leaving Air Temperature (°F db/°F wb)	53.8 / 53.5	56.2 /56.0	58.6 /58.2	54.2 / 54.0	56.5 / 56.1	59.0 / 58.7	54.6 / 54.2	57.0 / 56.7	59.4 / 59.0

NOTES: Above performance assumes ambient temperature is equal to entering air temperature and reflects gross capacities.

UNIT DATA - RCA171 WITH HCA201 / VCA201

RATED AT 95 °F DB / 78 °F WB ENTERING AIR TEMPERATURE.

PERFORMANCE DATA	NET COOLING	Total Capacity (Btu/h)	176,800		
		Sensible Capacity (Btu/h)	95,393		
		Electric Power (W)	14,456		
		Leaving Air Temperature (°F db / °F wb)	56.1 / 55.6		
		Moisture Removal (lbs/hr)	73.2		
		Energy Efficiency Ratio (EER)	12.2		
		Nominal Airflow (CFM)	2,200		
ELECTRICAL DATA	COMPRESSOR(S)	Qty-Nominal Tons-Type	1 - 13.5 - Scroll		
		Capacity Reduction	0/50/100 (HGBP) or 0/10-100 (Digital)		
		Electric Supply (V/Phase/Hz)	208-230/3/60	460/3/60	575/3/60
		Run Load Amps (RLA)	51.3	23.1	19.9
		Locked Rotor Amps (LRA)	300	150	109
	CONDENSER FAN MOTOR(S)	Qty - Horsepower (HP)	2 - 1		
		FLA (ea)	3.4 / 5.4	1.7 / 2.7	2.0/2.0
		Type	PSC		
	UNIT	Unit Minimum Circuit Ampacity	74.8	33.4	28.9
		Max. Time Delay Fuse or HACR Breaker	125	50	45
MECHANICAL DATA	CONDENSER FAN(S)	Airflow (CFM)	12,400		
		Diameter (in)-Pitch (deg)	26 - 32		
	CONDENSER COIL(S)	Quantity	4		
		Tube Material - Fin Material	Copper - Aluminum		
		Face Area (sq. ft.)	30.8		
		Rows - Fins per Inch	4 - 12		
	REFRIGERANT CONNECTION(S)	Suction Line (in OD)	$1^{3}/_{8}$ (Qty 1)		
		Liquid Line (in OD)	$^{7}/_{8}$ (Qty 1)		
		Optional Hot Gas Bypass (in OD)	$^{5}/_{8}$ (Qty 1)		
		Optional Hot Gas Reheat (in OD)	$^{5}/_{8}$ (Qty 1)		
	CABINET	Sheet Metal	G90 Galvanized		
		Finish	Polyester Coating		
		Top Pan Thickness (ga)	16		
		Sides and Panels Thickness (ga)	18		
		Bottom Pan Thickness (ga)	16		
	REFRIGERANT - R410A	Charge based on 25' line set (lbs per circuit)	55		
	WEIGHTS	Unit Weight (lbs)	1,250		
		Shipping Weight (lbs)	1,345		

NOTES: 1. Refrigerant connections are actual connection sizes at unit. For line sizing, see "Reference Information" tables on pages 22 - 23.

			ENTERING AIR TEMPERATURE (°F)								
			90 DB			95 DB			100 DB		
	CFM		76 WB	78 WB	80 WB	76 WB	78 WB	80 WB	76 WB	78 WB	80 WB
COOLING	1,800	Total Capacity (Btu/h)	165,380	170,926	176,663	162,679	168,244	173,869	159,757	165,291	170,885
		Sensible Capacity (Btu/h)	84,857	80,221	75,466	93,626	89,096	84,382	102,300	97,816	93,199
		Electric Power (W)	12,763	12,840	12,922	13,400	13,479	13,559	14,072	14,153	14,233
		Leaving Air Temperature (°F db/°F wb)	47.8 / 47.5	50.3 / 50.0	52.8 / 52.5	48.4/ 48.0	50.8 / 50.4	53.3 / 53.0	48.9/ 48.6	51.3 / 51.0	53.8/ 53.4
	2,200	Total Capacity (Btu/h)	176,981	182,644	188,340	173,931	179,529	185,149	170,487	176,093	181,776
		Sensible Capacity (Btu/h)	92,538	86,832	80,903	103,484	97,909	92,171	114,230	108,782	103,183
		Electric Power (W)	12,935	13,023	13,099	13,572	13,654	13,734	14,239	14,321	14,411
		Leaving Air Temperature (°F db/°F wb)	52.4 / 52.0	54.8 / 54.5	57.3 / 57.0	52.8 / 52.4	55.2 / 55.0	57.7/ 57.4	53.3 / 53.0	55.7/ 55.5	58.1 / 57.8
	2,700	Total Capacity (Btu/h)	187,320	192,963	198,795	183,797	189,404	195,133	179,826	185,234	190,970
		Sensible Capacity (Btu/h)	101,387	94,412	87,416	115,046	108,179	101,281	128,477	121,453	114,742
		Electric Power (W)	13,104	13,185	13,276	13,730	13,812	13,904	14,388	14,462	14,558
		Leaving Air Temperature (°F db/°F wb)	56.5 / 56.3	58.9 / 58.5	61.2 / 61.0	56.8 / 56.5	59.2 / 59.0	61.6/ 61.3	57.3 / 57.0	59.6 / 59.4	61.9 / 61.4

NOTES: Above performance assumes ambient temperature is equal to entering air temperature and reflects gross capacities.

UNIT DATA - RCA201 WITH HCA201 / VCA201

RATED AT 95 °F DB / 78 °F WB ENTERING AIR TEMPERATURE.

PERFORMANCE DATA	NET COOLING	Total Capacity (Btu/h)	202,400		
		Sensible Capacity (Btu/h)	108,838		
		Electric Power (W)	17,102		
		Leaving Air Temperature (°F db / °F wb)	56.0 / 55.3		
		Moisture Removal (lbs/hr)	83.2		
		Energy Efficiency Ratio (EER)	11.8		
		Nominal Airflow (CFM)	2,500		
ELECTRICAL DATA	COMPRESSOR(S)	Qty-Nominal Tons-Type	1 - 15.0 - Scroll		
		Capacity Reduction	0/50/100 (HGBP) or 0/10-100 (Digital)		
		Electric Supply (V/Phase/Hz)	208-230/3/60	460/3/60	575/3/60
		Run Load Amps (RLA)	55.8	26.9	23.7
		Locked Rotor Amps (LRA)	340	173	132
	CONDENSER FAN MOTOR(S)	Qty - Horsepower (HP)	2 - 1		
		FLA (ea)	3.4 / 5.4	1.7 / 2.7	2.0/2.0
		Type	PSC		
	UNIT	Unit Minimum Circuit Ampacity	78.8	40.0	57.6
		Max. Time Delay Fuse or HACR Breaker	125	60	80
MECHANICAL DATA	CONDENSER FAN(S)	Airflow (CFM)	12,400		
		Diameter (in)-Pitch (deg)	26 - 32		
	CONDENSER COIL(S)	Quantity	4		
		Tube Material - Fin Material	Copper - Aluminum		
		Face Area (sq. ft.)	30.8		
		Rows - Fins per Inch	4 - 12		
	REFRIGERANT CONNECTION(S)	Suction Line (in OD)	$1\frac{3}{8}$ (Qty 1)		
		Liquid Line (in OD)	$\frac{7}{8}$ (Qty 1)		
		Optional Hot Gas Bypass (in OD)	$\frac{5}{8}$ (Qty 1)		
		Optional Hot Gas Reheat (in OD)	$\frac{3}{4}$ (Qty 1)		
	CABINET	Sheet Metal	G90 Galvanized		
		Finish	Polyester Coating		
		Top Pan Thickness (ga)	16		
		Sides and Panels Thickness (ga)	18		
		Bottom Pan Thickness (ga)	16		
	REFRIGERANT - R410A	Charge based on 25' line set (lbs per circuit)	58		
	WEIGHTS	Unit Weight (lbs)	1,300		
		Shipping Weight (lbs)	1,400		

NOTES: 1. Refrigerant connections are actual connection sizes at unit. For line sizing, see "Reference Information" tables on pages 22 - 23.

			ENTERING AIR TEMPERATURE (°F)								
			90 DB			95 DB			100 DB		
	CFM		76 WB	78 WB	80 WB	76 WB	78 WB	80 WB	76 WB	78 WB	80 WB
COOLING	2,000	Total Capacity (Btu/h)	188,272	194,473	200,856	185,143	191,347	197,629	181,765	187,926	194,182
		Sensible Capacity (Btu/h)	96,406	91,183	85,822	106,062	100,952	95,656	115,576	110,562	105,363
		Electric Power (W)	15,072	15,171	15,274	15,836	15,937	16,040	16,644	16,747	16,853
		Leaving Air Temperature (°F db/°F wb)	47.0 / 46.7	49.5 / 49.4	52.0 / 51.7	47.5 / 47.0	50.0 / 49.8	52.5 / 52.2	48.1 / 47.8	50.5 / 50.3	53.0 / 52.7
	2,500	Total Capacity (Btu/h)	202,876	209,181	215,693	199,188	205,505	211,892	195,193	201,493	207,844
		Sensible Capacity (Btu/h)	105,909	99,338	92,763	118,251	111,819	105,319	130,417	124,169	117,738
		Electric Power (W)	15,322	15,427	15,538	16,082	16,190	16,302	16,885	16,994	17,107
		Leaving Air Temperature (°F db/°F wb)	52.1 / 51.7	54.6 / 54.2	57.0 / 56.7	52.6 /52.2	55.0 / 54.8	57.5 / 57.3	53.1 / 53.0	55.5 / 55.4	57.9 / 57.7
	3,000	Total Capacity (Btu/h)	213,214	219,669	226,178	209,040	215,512	221,968	204,517	210,982	217,381
		Sensible Capacity (Btu/h)	114,653	106,898	99,026	129,694	122,098	114,365	144,426	137,105	129,512
		Electric Power (W)	15,507	15,618	15,732	16,262	16,378	16,495	17,056	17,176	17,295
		Leaving Air Temperature (°F db/°F wb)	55.8 / 55.5	58.3 / 58.0	60.7 / 60.5	56.2 / 56.0	58.7 / 58.4	61.0 / 60.7	56.6 / 56.4	59.1 / 58.8	61.4 / 61.2

NOTES: Above performance assumes ambient temperature is equal to entering air temperature and reflects gross capacities.

UNIT DATA - RCA271 WITH HCA271 / VCA271

RATED AT 95 °F DB / 78 °F WB ENTERING AIR TEMPERATURE.

PERFORMANCE DATA	NET COOLING	Total Capacity (Btu/h)	245,000		
		Sensible Capacity (Btu/h)	131,116		
		Electric Power (W)	22,807		
		Leaving Air Temperature (°F db / °F wb)	55.8 / 55.1		
		Moisture Removal (lbs/hr)	104.5		
		Energy Efficiency Ratio (EER)	10.7		
		Nominal Airflow (CFM)	3,000		
ELECTRICAL DATA	COMPRESSOR(S)	Qty-Nominal Tons-Type	1 - 21.0 - Tandem Scroll		
		Capacity Reduction	0/50/100 (HGBP) or 0/10-100 (Digital)		
		Electric Supply (V/Phase/Hz)	208-230/3/60	460/3/60	575/3/60
		Run Load Amps (RLA)	33.3	17.9	12.8
		Locked Rotor Amps (LRA)	239	125	80
	CONDENSER FAN MOTOR(S)	Qty - Horsepower (HP)	2 - 1		
		FLA (ea)	3.4 / 5.4	1.7 / 2.7	2.0/2.0
		Type	PSC		
	UNIT	Unit Minimum Circuit Ampacity	85.7	45.7	32.8
		Max. Time Delay Fuse or HACR Breaker	110	60	45
MECHANICAL DATA	CONDENSER FAN(S)	Airflow (CFM)	12,400		
		Diameter (in)-Pitch (deg)	26 - 32		
	CONDENSER COIL(S)	Quantity	4		
		Tube Material - Fin Material	Copper - Aluminum		
		Face Area (sq. ft.)	30.8		
		Rows - Fins per Inch	4 - 12		
	REFRIGERANT CONNECTION(S)	Suction Line (in OD)	$1^{5}/_{8}$ (Qty 1)		
		Liquid Line (in OD)	$^{7}/_{8}$ (Qty 1)		
		Optional Hot Gas Bypass (in OD)	$^{5}/_{8}$ (Qty 1)		
		Optional Hot Gas Reheat (in OD)	$^{7}/_{8}$ (Qty 1)		
	CABINET	Sheet Metal	G90 Galvanized		
		Finish	Polyester Coating		
		Top Pan Thickness (ga)	16		
		Sides and Panels Thickness (ga)	18		
		Bottom Pan Thickness (ga)	16		
	REFRIGERANT - R410A	Charge based on 25' line set (lbs per circuit)	58		
	WEIGHTS	Unit Weight (lbs)	1,400		
		Shipping Weight (lbs)	1,500		

NOTES: 1. Refrigerant connections are actual connection sizes at unit. For line sizing, see "Reference Information" tables on pages 22 - 23.

			ENTERING AIR TEMPERATURE (°F)								
			90 DB			95 DB			100 DB		
	CFM		76 WB	78 WB	80 WB	76 WB	78 WB	80 WB	76 WB	78 WB	80 WB
COOLING	2,500	Total Capacity (Btu/h)	232,026	239,439	246,999	228,079	235,505	242,959	223,528	230,839	238,643
		Sensible Capacity (Btu/h)	118,945	112,334	105,517	131,020	124,553	117,824	142,593	136,184	129,987
		Electric Power (W)	20,205	20,351	20,502	21,275	21,420	21,574	22,378	22,528	22,695
		Leaving Air Temperature (°F db/°F wb)	47.9 / 47.6	50.3 / 50.3	52.9 / 52.8	48.4 / 48.4	50.8 / 50.8	53.3 / 53.3	49.0 / 49.0	51.4 / 51.4	53.8 / 53.8
	3,000	Total Capacity (Btu/h)	246,273	253,293	260,872	241,805	248,733	256,492	236,726	244,296	251,889
		Sensible Capacity (Btu/h)	128,314	119,978	111,851	143,091	134,851	127,248	157,555	150,007	142,238
		Electric Power (W)	20,512	20,650	20,810	21,572	21,713	21,887	22,680	22,838	23,010
		Leaving Air Temperature (°F db/°F wb)	52.1 / 52.0	54.4 / 54.4	56.9 / 56.9	52.4 / 52.4	54.8 / 54.8	57.3 / 57.3	53.0 / 53.0	55.3 / 55.3	57.7 / 57.7
	3,500	Total Capacity (Btu/h)	256,732	264,153	271,801	252,019	259,293	266,717	246,458	253,955	263,469
		Sensible Capacity (Btu/h)	136,902	127,735	118,416	154,557	145,433	136,215	171,749	162,894	154,615
		Electric Power (W)	20,747	20,906	21,076	21,809	21,970	22,135	22,909	23,071	23,299
		Leaving Air Temperature (°F db/°F wb)	55.1 / 55.1	57.5 / 57.5	60.0 / 60.0	55.5 / 55.5	57.9 / 57.9	60.3 / 60.3	56.0 / 56.0	58.3 58.3	60.7 / 60.7

NOTES: Above performance assumes ambient temperature is equal to entering air temperature and reflects gross capacities.

UNIT DATA - RCA361 WITH HCA361 / VCA361

RATED AT 95 °F DB / 78 °F WB ENTERING AIR TEMPERATURE.

PERFORMANCE DATA	NET COOLING	Total Capacity (Btu/h)	305,800		
		Sensible Capacity (Btu/h)	164,541		
		Electric Power (W)	26,040		
		Leaving Air Temperature (°F db / °F wb)	56.2 / 55.5		
		Moisture Removal (lbs/hr)	126.5		
		Energy Efficiency Ratio (EER)	11.7		
		Nominal Airflow (CFM)	3,800		
ELECTRICAL DATA	COMPRESSOR(S)	Qty-Nominal Tons-Type	1 - 24.0 - Tandem Scroll		
		Capacity Reduction	0/50/100 (HGBP) or 0/10-100 (Digital)		
		Electric Supply (V/Phase/Hz)	208-230/3/60	460/3/60	575/3/60
		Run Load Amps (RLA)	48.1	18.6	14.7
		Locked Rotor Amps (LRA)	245	125	100
	CONDENSER FAN MOTOR(S)	Qty - Horsepower (HP)	4 - 1		
		FLA (ea)	3.4/3.4/5.4/5.4	1.7/1.7/2.7/2.7	2.0/2.0/2.0/2.0
		Type	PSC		
	UNIT	Unit Minimum Circuit Ampacity	125.6	51.6	41.1
		Max. Time Delay Fuse or HACR Breaker	150	70	50.0
MECHANICAL DATA	CONDENSER FAN(S)	Airflow (CFM)	28,000		
		Diameter (in)-Pitch (deg)	26 - 32		
	CONDENSER COIL(S)	Quantity	4		
		Tube Material - Fin Material	Copper - Aluminum		
		Face Area (sq. ft.)	70.0		
		Rows - Fins per Inch	2 - 14		
	REFRIGERANT CONNECTION(S)	Suction Line (in OD)	$1\frac{5}{8}$ (Qty 1)		
		Liquid Line (in OD)	$1\frac{1}{8}$ (Qty 1)		
		Optional Hot Gas Bypass (in OD)	$\frac{7}{8}$ (Qty 1)		
		Optional Hot Gas Reheat (in OD)	$\frac{7}{8}$ (Qty 1)		
	CABINET	Sheet Metal	G90 Galvanized		
		Finish	Polyester Coating		
		Top Pan Thickness (ga)	16		
		Sides and Panels Thickness (ga)	18		
		Bottom Pan Thickness (ga)	16		
	REFRIGERANT - R410A	Charge based on 25' line set (lbs per circuit)	65		
	WEIGHTS	Unit Weight (lbs)	1,700		
		Shipping Weight (lbs)	1,820		

NOTES: 1. Refrigerant connections are actual connection sizes at unit. For line sizing, see "Reference Information" tables on pages 22 - 23.

			ENTERING AIR TEMPERATURE (°F)								
			90 DB			95 DB			100 DB		
	CFM		76 WB	78 WB	80 WB	76 WB	78 WB	80 WB	76 WB	78 WB	80 WB
COOLING	3,300	Total Capacity (Btu/h)	291,965	301,709	311,933	292,862	296,881	304,000	281,814	291,769	301,717
		Sensible Capacity (Btu/h)	150,479	141,933	133,327	169,248	158,285	149,791	182,588	174,469	166,124
		Electric Power (W)	23,316	23,421	23,532	23,325	24,493	24,606	25,535	25,645	25,762
		Leaving Air Temperature (°F db/°F wb)	49.3 / 49.3	51.7 / 51.7	54.2 / 54.2	49.8 / 49.8	52.2 / 52.2	54.6 / 54.6	50.3 / 50.3	52.7 / 52.7	55.1 / 55.1
	3,800	Total Capacity (Btu/h)	305,740	315,758	326,105	306,694	310,496	320,785	294,730	304,840	315,071
		Sensible Capacity (Btu/h)	159,859	150,095	140,315	181,337	169,272	159,584	197,408	188,166	178,635
		Electric Power (W)	23,471	23,581	23,695	23,479	24,653	24,772	25,691	25,806	25,924
		Leaving Air Temperature (°F db/°F wb)	52.4 / 52.4	54.8 / 54.8	57.2 / 57.2	52.9 / 52.9	55.2 / 55.2	57.6 / 57.6	53.3 / 53.3	55.7 / 55.7	58.0 / 58.0
	4,200	Total Capacity (Btu/h)	314,885	324,959	335,311	315,778	319,436	329,618	303,213	313,338	323,832
		Sensible Capacity (Btu/h)	167,043	156,387	145,286	190,792	177,657	166,578	209,066	198,748	188,319
		Electric Power (W)	23,575	23,687	23,795	23,585	24,760	24,868	25,797	25,913	26,037
		Leaving Air Temperature (°F db/°F wb)	54.4 / 54.4	56.8 / 56.8	59.3 / 59.2	54.8 / 54.8	57.2 / 57.2	59.6 / 59.6	55.3 / 55.3	57.6 / 57.6	59.9 / 59.9

NOTES: Above performance assumes ambient temperature is equal to entering air temperature and reflects gross capacities.

UNIT DATA - RCA421 WITH HCA421 / VCA421

RATED AT 95 °F DB / 78 °F WB ENTERING AIR TEMPERATURE.

PERFORMANCE DATA	NET COOLING	Total Capacity (Btu/h)	395,500		
		Sensible Capacity (Btu/h)	213,908		
		Electric Power (W)	35,432		
		Leaving Air Temperature (°F db / °F wb)	56.6 / 56.0		
		Moisture Removal (lbs/hr)	174.2		
		Energy Efficiency Ratio (EER)	11.1		
		Nominal Airflow (CFM)	5,000		
ELECTRICAL DATA	COMPRESSOR(S)	Qty-Nominal Tons-Type	1 - 31.5 - Tandem Scroll		
		Capacity Reduction	0/50/100 (HGBP) or 0/10-100 (Digital)		
		Electric Supply (V/Phase/Hz)	208-230/3/60	460/3/60	575/3/60
		Run Load Amps (RLA)	55.8	26.9	23.8
		Locked Rotor Amps (LRA)	340	173	132
	CONDENSER FAN MOTOR(S)	Qty - Horsepower (HP)	4 - 1		
		FLA (ea)	3.4/3.4/5.4/5.4	1.7/1.7/2.7/2.7	2.0/2.0/2.0/2.0
		Type	PSC		
	UNIT	Unit Minimum Circuit Ampacity	142.4	70.5	61.4
		Max. Time Delay Fuse or HACR Breaker	175	90	85
MECHANICAL DATA	CONDENSER FAN(S)	Airflow (CFM)	28,000		
		Diameter (in)-Pitch (deg)	26 - 32		
	CONDENSER COIL(S)	Quantity	4		
		Tube Material - Fin Material	Copper - Aluminum		
		Face Area (sq. ft.)	70.0		
		Rows - Fins per Inch	2 - 14		
	REFRIGERANT CONNECTION(S)	Suction Line (in OD)	$2^{1}/_{8}$ (Qty 2)		
		Liquid Line (in OD)	$1^{1}/_{8}$ (Qty 1)		
		Optional Hot Gas Bypass (in OD)	$^{7}/_{8}$ (Qty 1)		
		Optional Hot Gas Reheat (in OD)	$^{7}/_{8}$ (Qty 1)		
	CABINET	Sheet Metal	G90 Galvanized		
		Finish	Polyester Coating		
		Top Pan Thickness (ga)	16		
		Sides and Panels Thickness (ga)	18		
		Bottom Pan Thickness (ga)	16		
	REFRIGERANT - R410A	Charge based on 25' line set (lbs per circuit)	75		
	WEIGHTS	Unit Weight (lbs)	1,770		
		Shipping Weight (lbs)	1,900		

NOTES: 1. Refrigerant connections are actual connection sizes at unit. For line sizing, see "Reference Information" tables on pages 22 - 23.

			ENTERING AIR TEMPERATURE (°F)								
			90 DB			95 DB			100 DB		
	CFM		76 WB	78 WB	80 WB	76 WB	78 WB	80 WB	76 WB	78 WB	80 WB
COOLING	4,500	Total Capacity (Btu/h)	383,521	395,816	408,603	377,157	389,443	401,990	370,096	382,429	394,927
		Sensible Capacity (Btu/h)	198,660	186,828	175,039	220,909	209,300	197,658	242,765	231,379	220,022
		Electric Power (W)	31,603	31,884	32,185	33,012	33,300	33,604	34,497	34,786	35,099
		Leaving Air Temperature (°F db/°F wb)	47.9 / 47.9	50.4 / 50.4	52.9 / 52.9	48.4 48.4	50.9 50.9	53.4 53.4	48.9 48.9	51.4 51.4	56.5 / 55.5
	5,000	Total Capacity (Btu/h)	396,207	408,750	421,565	389,340	401,714	414,511	381,884	394,166	406,796
		Sensible Capacity (Btu/h)	207,741	194,861	181,697	232,673	219,992	207,074	257,296	244,837	232,098
		Electric Power (W)	31,903	32,201	32,514	33,306	33,608	33,930	34,794	35,095	35,414
		Leaving Air Temperature (°F db/°F wb)	53.0 / 53.0	55.4 / 55.4	57.8 / 57.8	53.4 53.4	55.8 55.8	58.2 58.2	53.9 53.9	56.2 56.2	58.6 / 58.0
	5,500	Total Capacity (Btu/h)	406,966	419,515	432,113	399,502	412,086	424,991	391,760	404,066	416,645
		Sensible Capacity (Btu/h)	216,554	202,444	187,465	244,224	230,318	216,187	271,663	257,865	243,911
		Electric Power (W)	32,167	32,474	32,782	33,560	33,877	34,213	35,050	35,360	35,686
		Leaving Air Temperature (°F db/°F wb)	56.5 / 56.5	59.0 / 58.9	61.4 / 61.3	50.9 / 50.9	59.2 59.2	61.6 61.6	57.3 57.3	59.6 / 59.6	60.5 / 60.2

NOTES: Above performance assumes ambient temperature is equal to entering air temperature and reflects gross capacities.

TYPICAL WIRING DIAGRAM

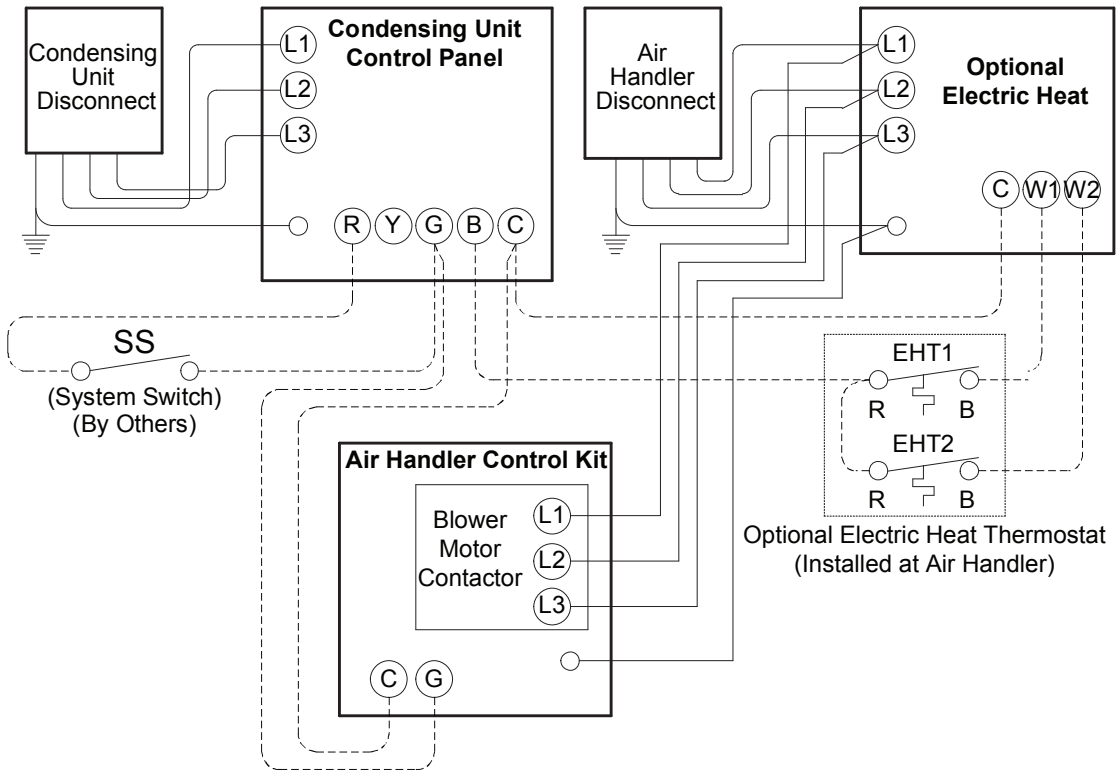

NOTES:

1. For systems without electric heat, disregard heater power connection at air handler disconnect and heater thermostat/circuit.
2. All electrical wiring and connections, including electrical grounding must comply with:
   a. United States: Refer to NFPA 70- latest revision, National Electrical Code, and local ordinances.
   b. Canada: Refer to CSA C22.1, Part 1- latest revision, Canadian Electrical Code and local ordinances.
3. Class 1 circuit ●——●
4. Class 2 circuit ●- - - - - - - - -●
5. Terminal Y is factory-wired to compressor lockout thermostat.
6. Terminal W2 and EHT2 are only used when air handler includes optional two-stage electric heat.
7. Condensing unit disconnect is not provided with condensing unit as standard. Disconnect may be obtained from factory as optional equipment or provided by others. Air handler disconnect must be provided by others.

TYPICAL SPLIT SYSTEM INSTALLATION

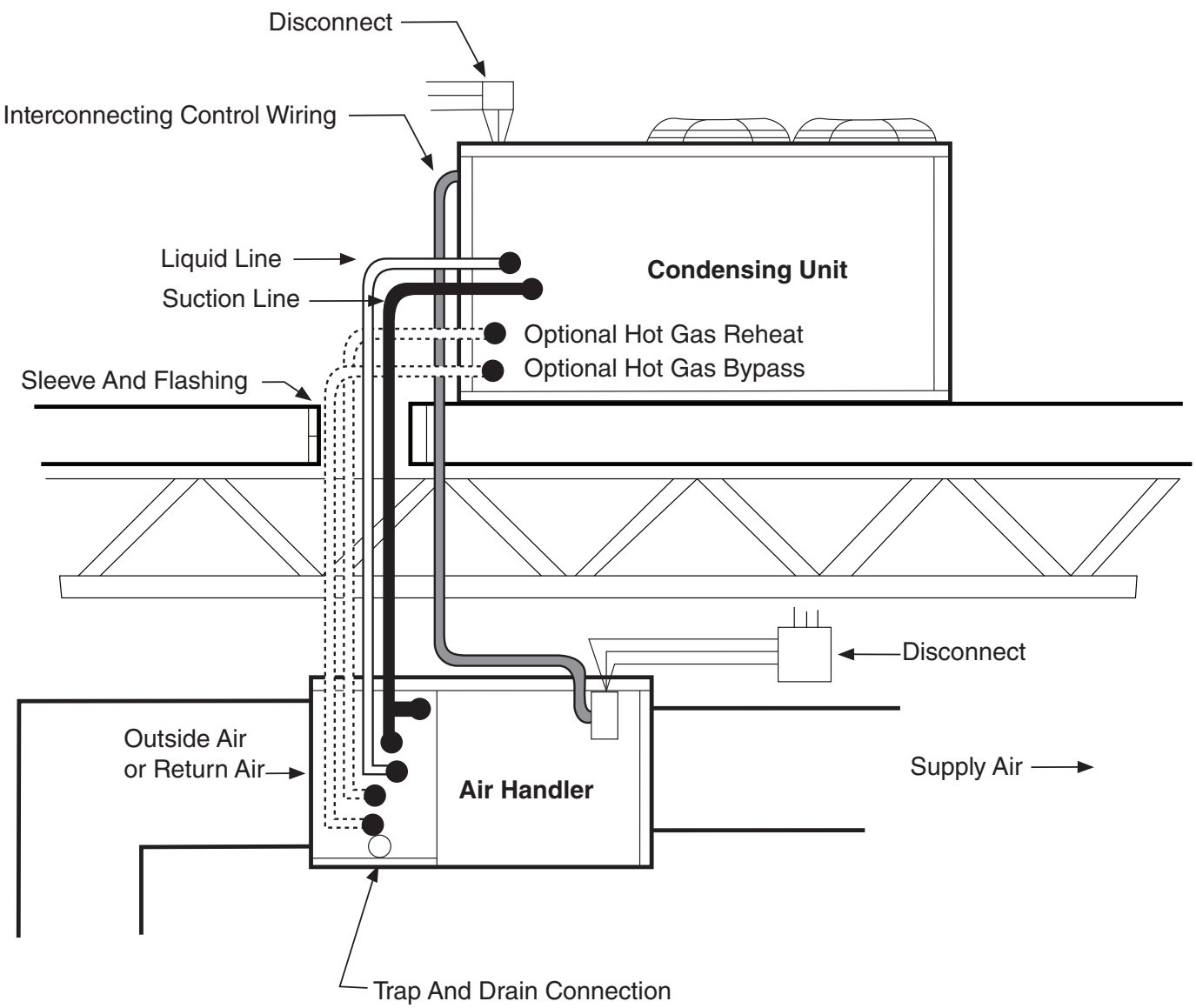

NOTES:

1. Condensing unit disconnect is not provided with condensing unit as standard. Disconnect may be obtained from factory as optional equipment or provided by others.
2. Air handler, air handler disconnect, interconnecting control wiring, all refrigerant line piping and sleeve/flashing materials are by others.
3. Suction, hot gas bypass, and hot gas reheat lines should be insulated with 5/8" minimum thickness closed cell foam insulation. Liquid line exposed to high ambient temperatures should be insulated 5/8" minimum thickness closed cell foam insulation.

TYPICAL INSTALLATION WITH CONDENSING UNIT ON BOTTOM

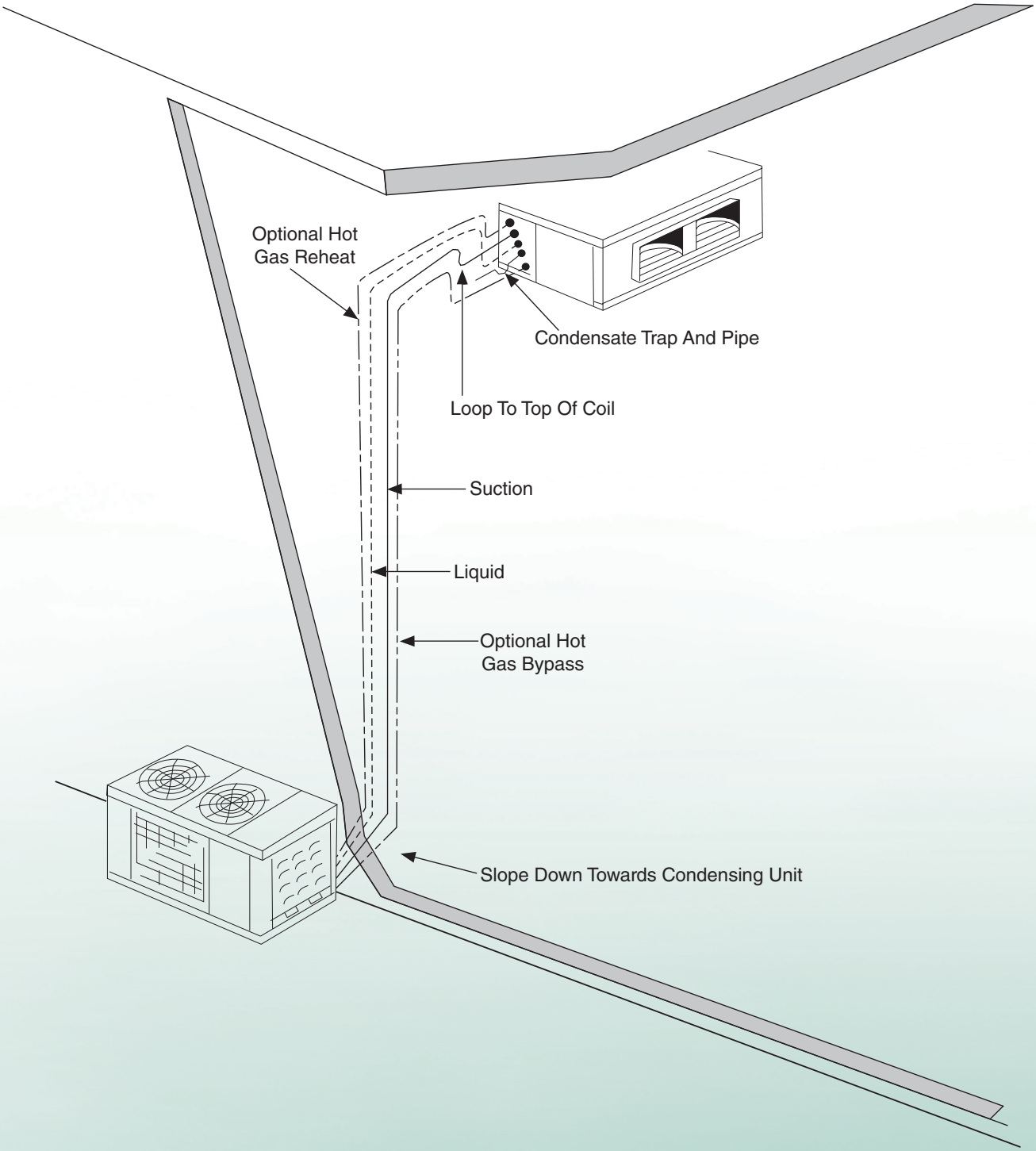

NOTES:

1. To prevent oil migration, lines should slope downwards towards the condensing unit and should slope downward away from the air handler.
2. Vertical risers greater than 4' in height should have a "P" trap installed at the base of the air handler.
3. Vertical risers greater than 20' in height require an extra "P" trap for every 20' of riser height in addition to the "P" trap installed at the base of the air handler. The trap is inverted at the top of the vertical rise.

TYPICAL INSTALLATION WITH CONDENSING UNIT ON TOP

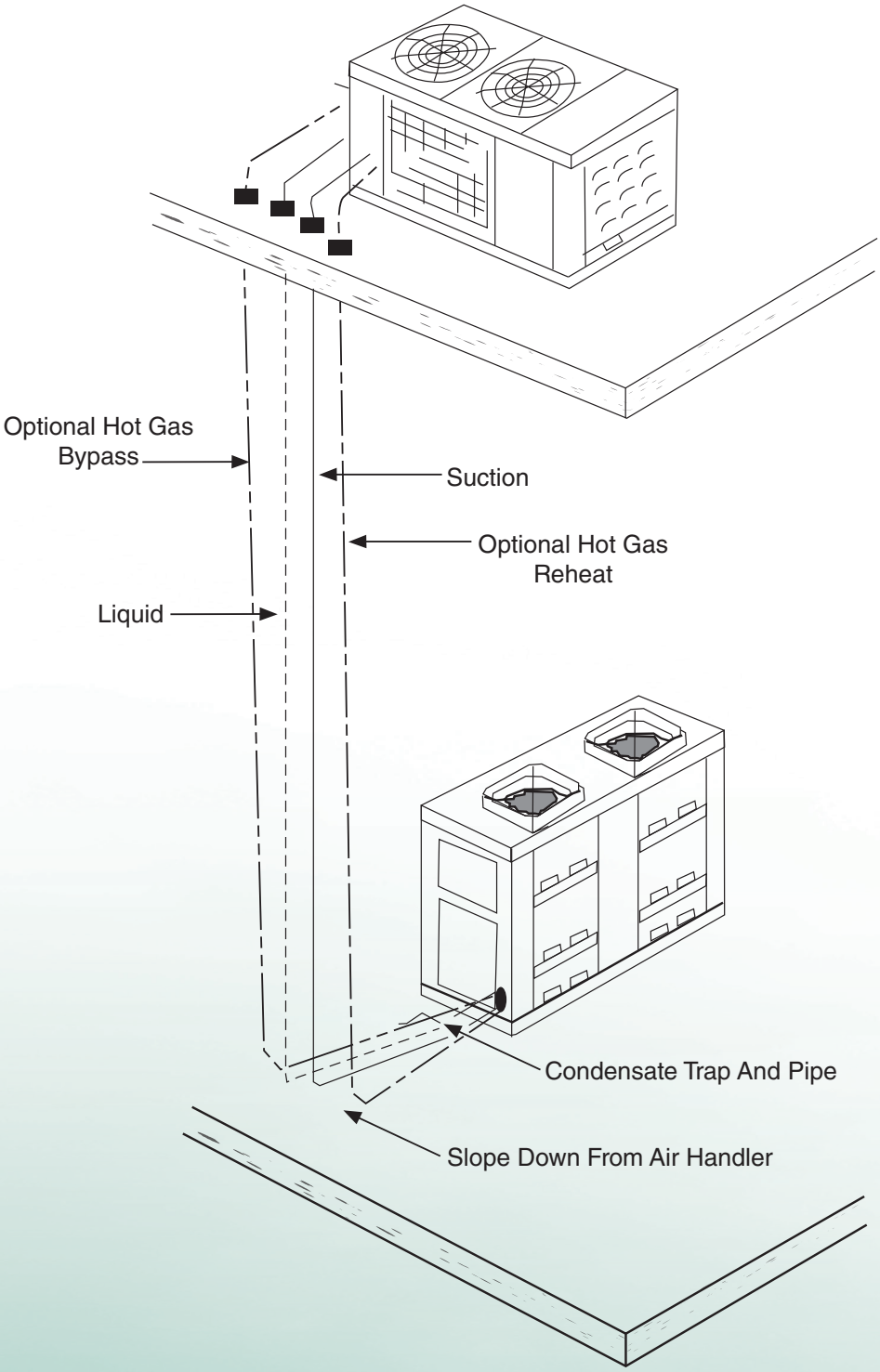

NOTES:

1. To prevent oil migration, lines should slope downwards towards the condensing unit and should slope downward away from the air handler.
2. Vertical risers greater than 4' in height should have a "P" trap installed at the base of the air handler.
3. Vertical risers greater than 20' in height require an extra "P" trap for every 20' of riser height in addition to the "P" trap installed at the base of the air handler. The trap is inverted at the top of the vertical rise.

DIMENSIONS RCA 051/061/071

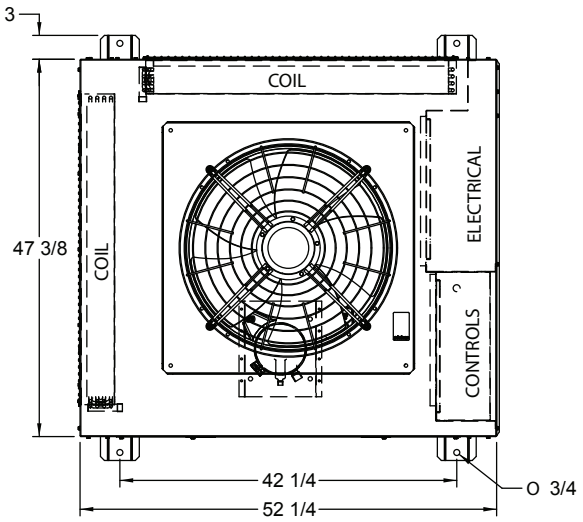

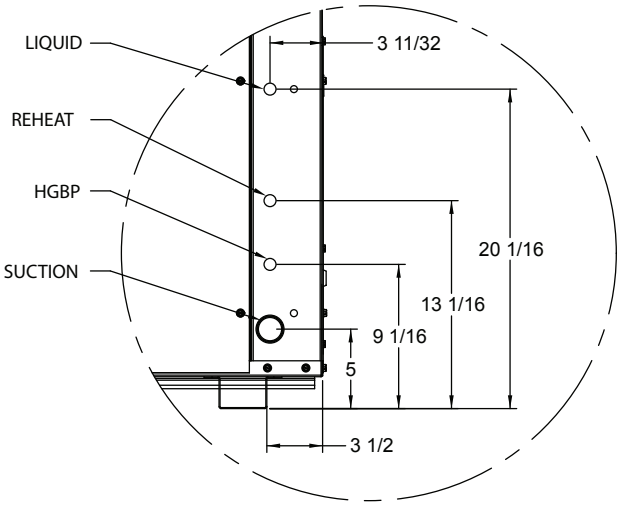

DETAIL B

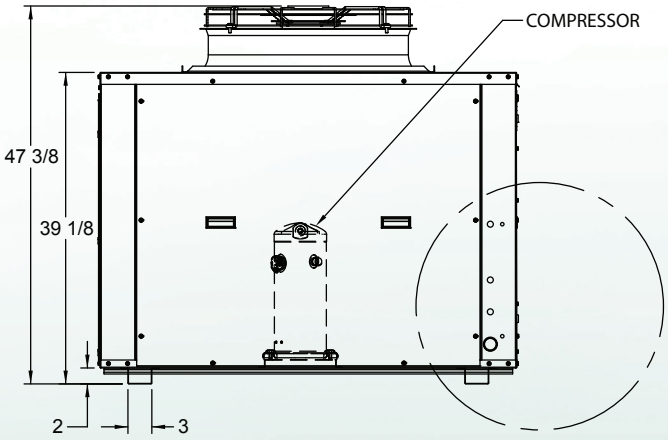

B

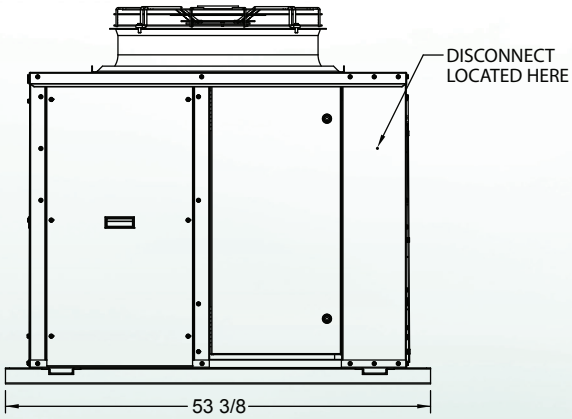

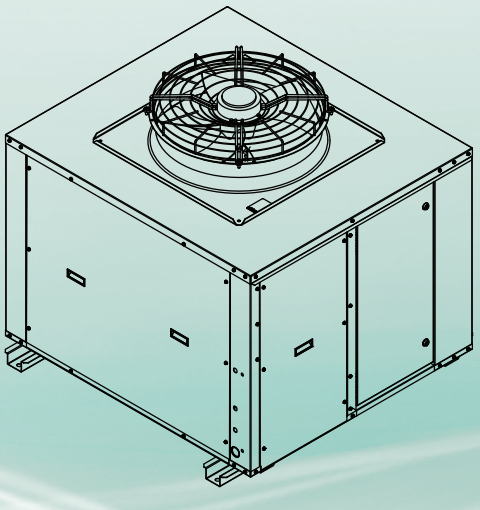

DIMENSIONS RCA 101/141

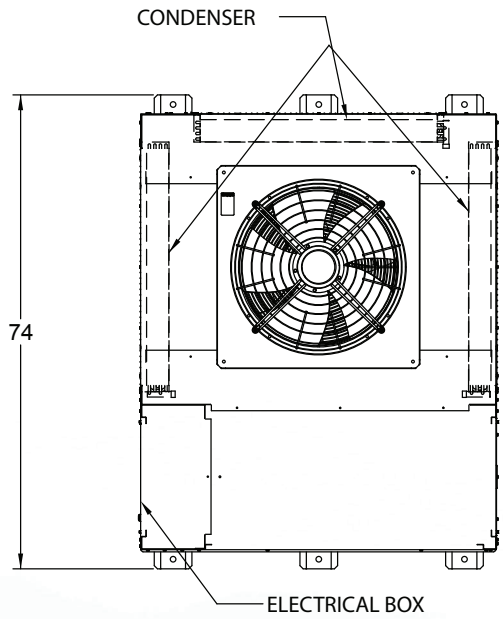

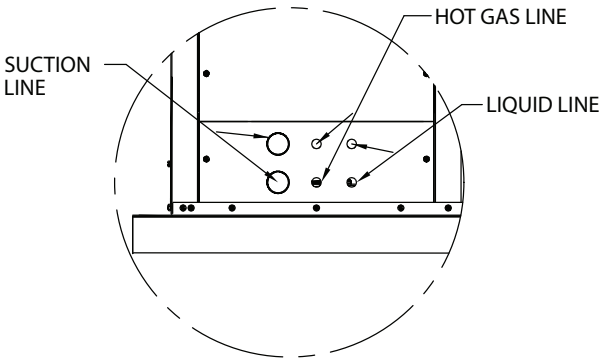

DETAIL A

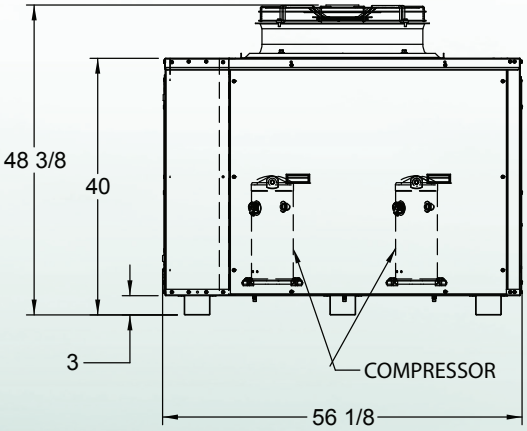

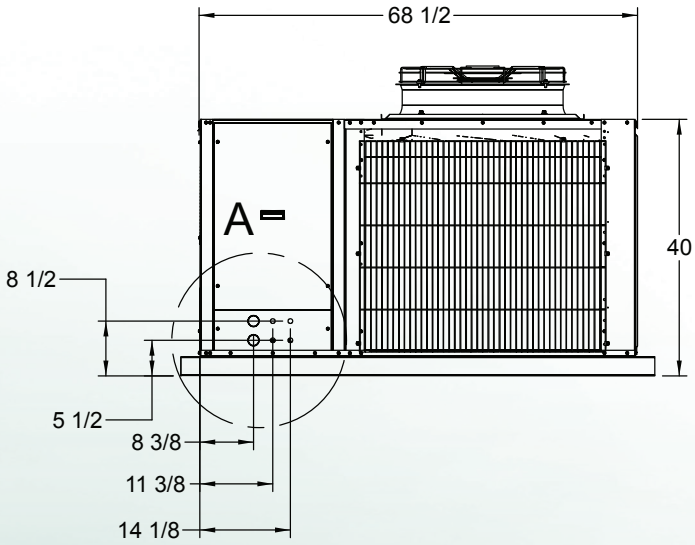

DISCONNECT SWITCH (OPTIONAL)

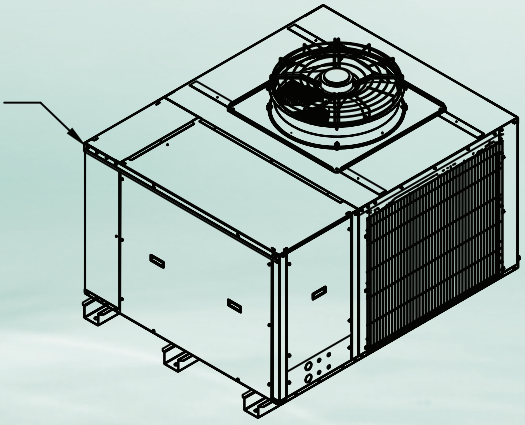

DIMENSIONS RCA 171/201/271

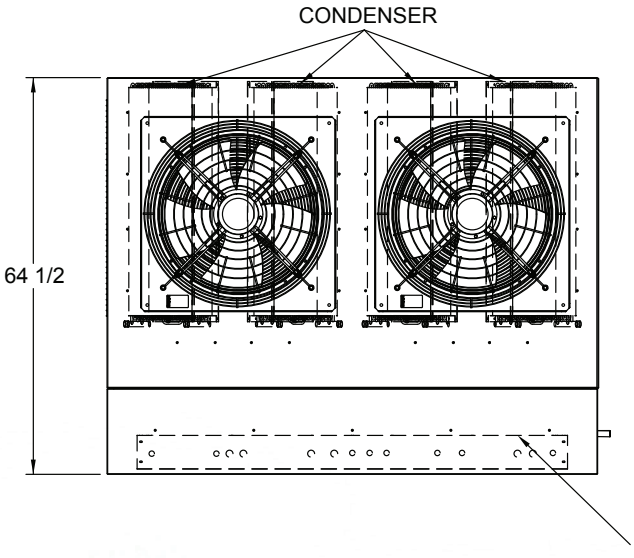

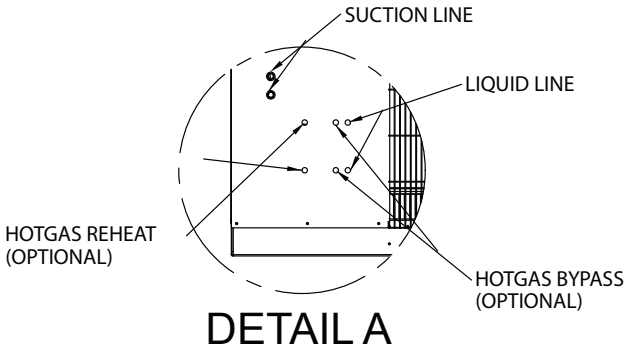

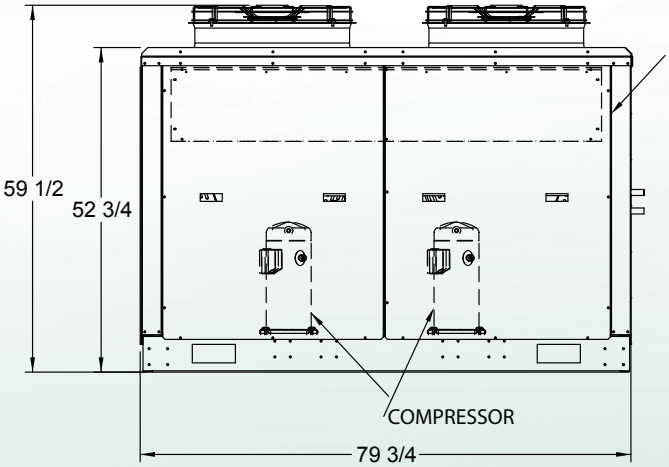

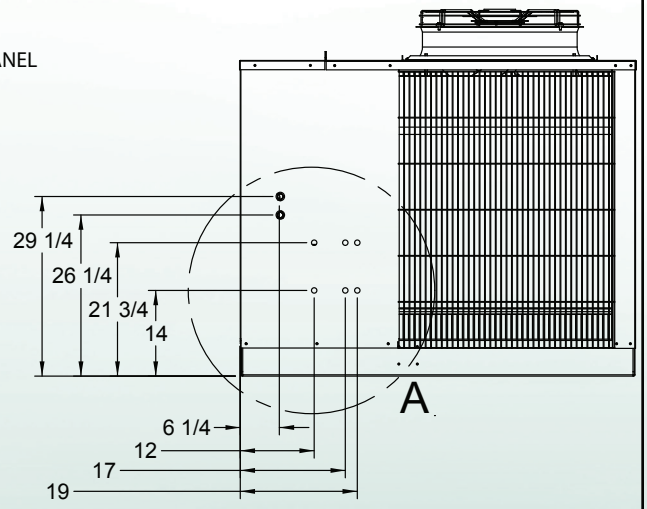

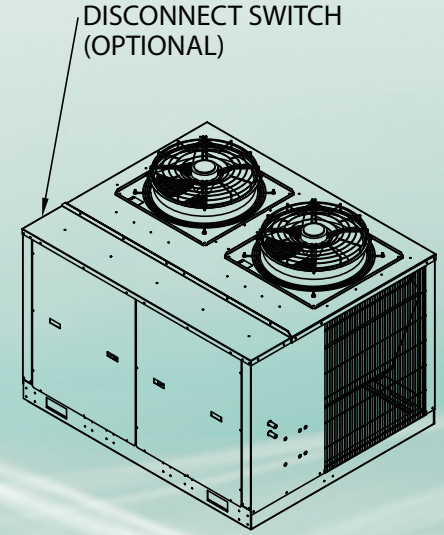

DIMENSIONS RCA 361/421

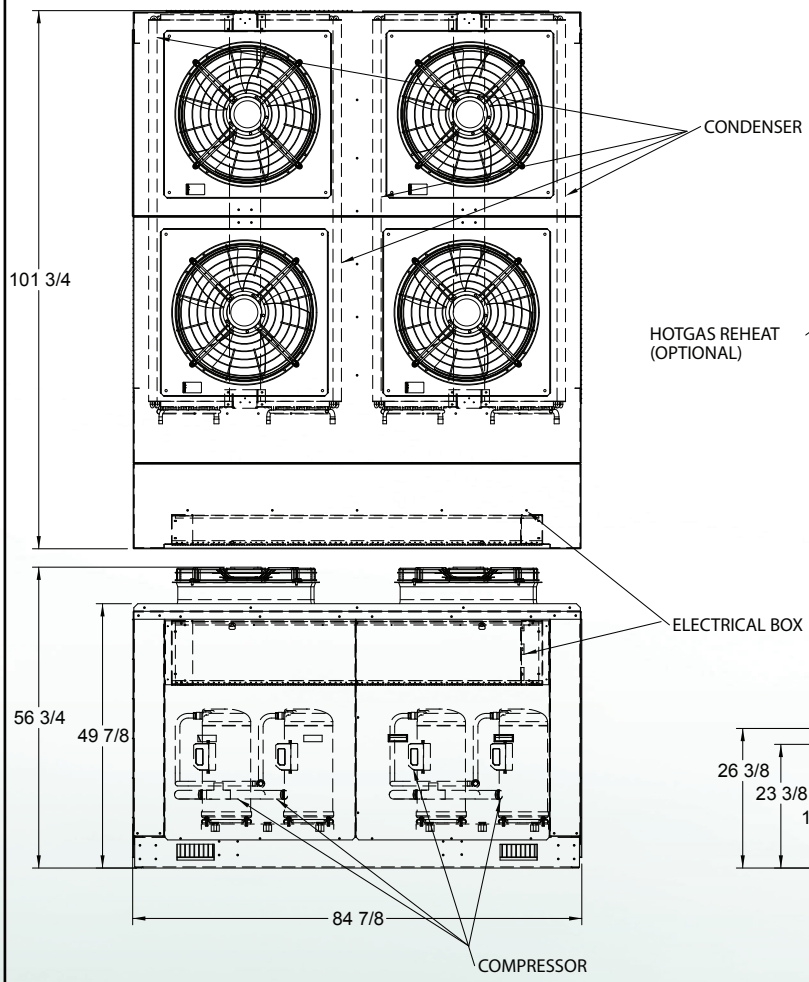

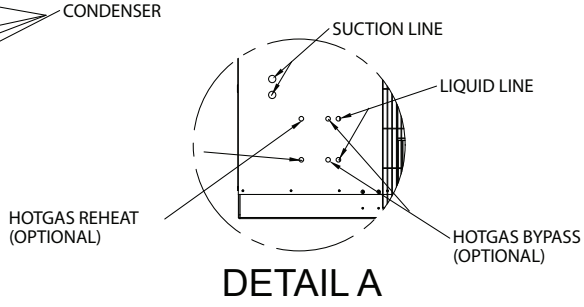

DETAIL A

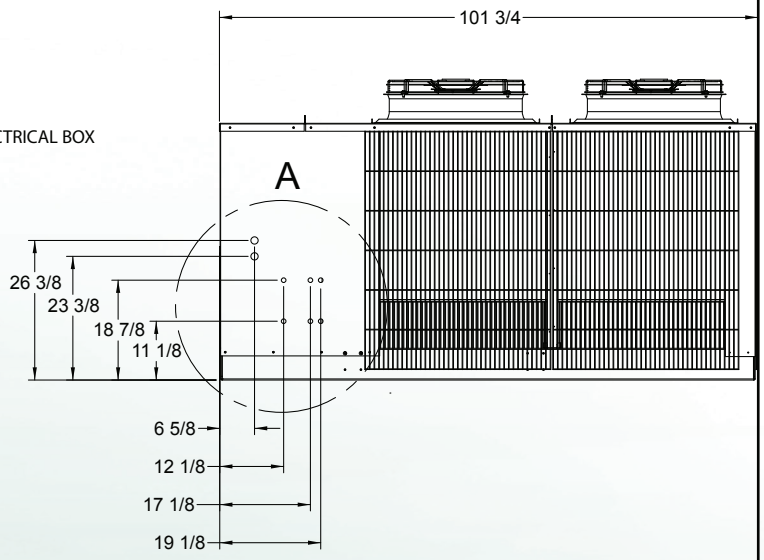

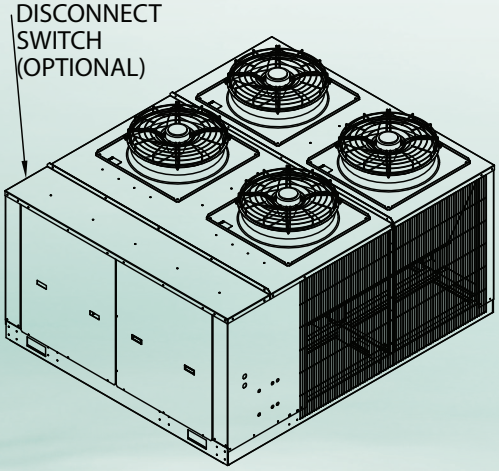

REFERENCE INFORMATION

AMBIENT TEMPERATURE CORRECTION FACTORS							
AMBIENT TEMPERATURE (°F)	85	90	95	100	105	110	115
TOTAL CAPACITY (Btu/h)	1.05	1.03	1.00	0.98	0.95	0.91	0.87
SENSIBLE CAPACITY (Btu/h)	1.03	1.02	1.00	0.99	0.97	0.97	0.93
ELECTRIC POWER (W)	0.95	0.98	1.00	1.03	1.05	1.08	1.11

RECOMMENDED REFRIGERANT LINE SIZES- AIR HANDLER BELOW CONDENSING UNIT (IN OD)								
NOMINAL CAPACITY (Btu/h)	0-25 FT. EQUIVALENT LENGTH				26-50 FT. EQUIVALENT LENGTH			
	SUCTION	LIQUID	HOT GAS REHEAT	HOT GAS BYPASS	SUCTION	LIQUID	HOT GAS REHEAT	HOT GAS BYPASS
36,000	5/8, 5/8	3/8	1/2	3/8	3/4, 3/4	1/2	1/2	1/2
48,000	3/4, 3/4	3/8	5/8	3/8	3/4, 3/4	1/2	5/8	1/2
60,000	3/4, 3/4	1/2	5/8	1/2	7/8, 7/8	1/2	5/8	1/2
72,000	7/8, 7/8	1/2	5/8	1/2	7/8, 7/8	1/2	5/8	1/2
84,000	1-1/8, 1-1/8	1/2	3/4	1/2	1-1/8, 7/8	1/2	3/4	1/2
96,000	1-1/8, 1-1/8	5/8	3/4	1/2	1-1/8, 7/8	5/8	3/4	1/2
120,000	1-1/8, 1-1/8	5/8	3/4	5/8	1-3/8, 1-3/8	5/8	3/4	5/8
150,000	1-1/8, 1-1/8	5/8	7/8	5/8	1-3/8, 1-3/8	5/8	7/8	5/8
180,000	1-3/8, 1-3/8	5/8	7/8	5/8	1-3/8, 1-3/8	5/8	7/8	5/8
220,000	1-3/8, 1-3/8	3/4	1-1/8	3/4	1-3/8, 1-3/8	3/4	1-1/8	3/4
250,000	1-3/8, 1-3/8	3/4	1-1/8	3/4	1-3/8, 1-3/8	3/4	1-1/8	3/4
300,000	1-5/8, 1-5/8	7/8	1-1/8	3/4	1-5/8, 1-5/8	7/8	1-1/8	7/8
360,000	1-3/8, 1-5/8	7/8	1-1/8	7/8	1-5/8, 1-5/8	7/8	1-1/8	7/8
420,000	1-5/8, 1-5/8	7/8	1-3/8	7/8	1-5/8, 1-5/8	7/8	1-3/8	7/8

NOMINAL CAPACITY (Btu/h)	51-75 FT. EQUIVALENT LENGTH				76-100 FT. EQUIVALENT LENGTH			
	SUCTION	LIQUID	HOT GAS REHEAT	HOT GAS BYPASS	SUCTION	LIQUID	HOT GAS REHEAT	HOT GAS BYPASS
36,000	7/8, 5/8	1/2	5/8	1/2	7/8, 3/4	1/2	5/8	N/A
48,000	7/8, 3/4	1/2	3/4	1/2	7/8, 7/8	1/2	5/8	N/A
60,000	1-1/8, 3/4	1/2	3/4	1/2	7/8, 7/8	1/2	3/4	N/A
72,000	1-1/8, 7/8	1/2	3/4	5/8	1-1/8, 7/8	5/8	3/4	N/A
84,000	1-1/8, 1-1/8	5/8	7/8	5/8	1-1/8, 7/8	5/8	3/4	N/A
96,000	1-1/8, 1-1/8	5/8	7/8	5/8	1-1/8, 1-1/8	5/8	3/4	N/A
120,000	1-3/8, 1-3/8	5/8	7/8	3/4	1-3/8, 1-3/8	5/8	7/8	N/A
150,000	1-3/8, 1-3/8	5/8	1-1/8	3/4	1-3/8, 1-3/8	3/4	7/8	N/A
180,000	1-3/8, 1-3/8	3/4	1-1/8	3/4	1-3/8, 1-3/8	3/4	1-1/8	N/A
220,000	1-3/8, 1-3/8	3/4	1-1/8	7/8	1-5/8, 1-3/8	3/4	1-1/8	N/A
250,000	1-5/8, 1-3/8	3/4	1-1/8	7/8	1-5/8, 1-3/8	7/8	1-1/8	N/A
300,000	1-5/8, 1-5/8	7/8	1-1/8	7/8	1-5/8, 1-5/8	7/8	1-1/8	N/A
360,000	2-1/8, 1-5/8	7/8	1-3/8	1-1/8	2-1/8, 1-5/8	1-1/8	1-3/8	N/A
420,000	2-1/8, 1-5/8	1-1/8	1-3/8	1-1/8	2-1/8, 1-5/8	1-1/8	1-5/8	N/A

NOTES:

1. Line sizes are calculated assuming single scroll compressors in Models 051-201 and tandem scroll compressors in Models 271-421. Contact the factory for any other compressor configuration.
2. All piping must comply with standard refrigeration piping techniques. Consult the American Society of Heating, Refrigerating and Air-Conditioning Engineers (ASHRAE) Handbook-Refrigeration.
3. Suction, hot gas bypass and hot gas reheat lines should be insulated with a 5/8" minimum thickness closed cell foam insulation. Liquid line exposed to high ambient temperatures should be insulated with a 5/8" minimum thickness closed cell foam insulation.
4. First suction line diameter size is for horizontal runs. Second suction line diameter size is for vertical risers.
5. Maximum suction line vertical lift is 60'. Riser-sized traps are required for every 20' of vertical riser starting at the lowest point.
6. If ordered, hot gas reheat and hot gas bypass require only one line.
7. Standard hot gas bypass is not recommended for use with greater than 75' of equivalent line length. Internal hot gas bypass should be used as an alternative.
8. Contact factory for applications with digital scroll compressors.
9. Contact factory for layouts requiring more than 75' of actual line length.

REFERENCE INFORMATION

RECOMMENDED REFRIGERANT LINE SIZES- AIR HANDLER LEVEL WITH OR ABOVE CONDENSING UNIT (IN OD)								
NOMINAL CAPACITY (Btu/h)	0-25 FT. EQUIVALENT LENGTH				26-50 FT. EQUIVALENT LENGTH			
	SUCTION	LIQUID	HOT GAS REHEAT	HOT GAS BYPASS	SUCTION	LIQUID	HOT GAS REHEAT	HOT GAS BYPASS
36,000	3/4	1/2	1/2	3/8	3/4	1/2	1/2	3/8
48,000	7/8	1/2	1/2	3/8	7/8	1/2	1/2	1/2
60,000	7/8	5/8	1/2	1/2	1-1/8	5/8	1/2	1/2
72,000	1-1/8	5/8	1/2	1/2	1-1/8	5/8	5/8	1/2
84,000	1-1/8	5/8	5/8	1/2	1-1/8	5/8	5/8	1/2
96,000	1-1/8	5/8	5/8	1/2	1-1/8	5/8	5/8	5/8
120,000	1-1/8	5/8	5/8	1/2	1-3/8	5/8	3/4	5/8
150,000	1-3/8	3/4	3/4	5/8	1-3/8	3/4	3/4	5/8
180,000	1-3/8	3/4	3/4	5/8	1-3/8	3/4	3/4	3/4
220,000	1-5/8	3/4	3/4	5/8	1-5/8	7/8	7/8	3/4
250,000	1-5/8	3/4	7/8	3/4	2-1/8	7/8	7/8	3/4
300,000	2-1/8	7/8	7/8	3/4	2-1/8	1-1/8	1-1/8	7/8
360,000	2-1/8	7/8	1-1/8	7/8	2-1/8	1-1/8	1-1/8	7/8
420,000	2-1/8	1-1/8	1-3/8	7/8	2-1/8	1-1/8	1-3/8	7/8

NOMINAL CAPACITY (Btu/h)	51-75 FT. EQUIVALENT LENGTH				76-100 FT. EQUIVALENT LENGTH			
	SUCTION	LIQUID	HOT GAS REHEAT	HOT GAS BYPASS	SUCTION	LIQUID	HOT GAS REHEAT	HOT GAS BYPASS
36,000	7/8	1/2	1/2	1/2	7/8	5/8	5/8	N/A
48,000	7/8	5/8	5/8	1/2	1-1/8	5/8	5/8	N/A
60,000	1-1/8	5/8	5/8	1/2	1-1/8	3/4	5/8	N/A
72,000	1-1/8	3/4	5/8	1/2	1-1/8	3/4	3/4	N/A
84,000	1-1/8	3/4	5/8	5/8	1-3/8	3/4	3/4	N/A
96,000	1-3/8	3/4	3/4	5/8	1-3/8	3/4	3/4	N/A
120,000	1-3/8	7/8	3/4	5/8	1-3/8	7/8	3/4	N/A
150,000	1-3/8	7/8	7/8	3/4	1-5/8	7/8	7/8	N/A
180,000	1-5/8	7/8	7/8	3/4	1-5/8	1-1/8	7/8	N/A
220,000	1-5/8	1-1/8	7/8	7/8	1-5/8	1-1/8	7/8	N/A
250,000	2-1/8	1-1/8	1-1/8	7/8	2-1/8	1-1/8	7/8	N/A
300,000	2-1/8	1-1/8	1-1/8	7/8	2-1/8	1-3/8	1-1/8	N/A
360,000	2-1/8	1-1/8	1-3/8	1-1/8	2-1/8	1-3/8	1-3/8	N/A
420,000	2-1/8	1-1/8	1-3/8	1-1/8	2-1/8	1-3/8	1-5/8	N/A

NOTES:

1. Line sizes are calculated assuming single scroll compressors in Models 051-201 and tandem scroll compressors in Models 271-421. Contact the factory for any other compressor configuration.
2. All piping must comply with standard refrigeration piping techniques. Consult the American Society of Heating, Refrigerating and Air-Conditioning Engineers (ASHRAE) Handbook-Refrigeration.
3. Suction, hot gas bypass and hot gas reheat lines should be insulated with a 5/8" minimum thickness closed cell foam insulation. Liquid line exposed to high ambient temperatures should be insulated with a 5/8" minimum thickness closed cell foam insulation.
4. Maximum suction line vertical lift is 60'. Loop piping to the top of the coil.
5. Maximum liquid line vertical lift is 60'.
6. If ordered, hot gas reheat and hot gas bypass require only one line.
7. Standard hot gas bypass is not recommended for use with greater than 75' of equivalent line length. Internal hot gas bypass should be used as an alternative.
8. Contact factory for applications with digital scroll compressors.
9. Contact factory for layouts requiring more than 75' of actual line length.

THANK YOU FOR YOUR BUSINESS

7050 Overland Road
Orlando, FL 32810 U.S.A.
Telephone: +1.407.292.4400
Fax: +1.407.299.6178
www.addison-hvac.com

These products (with the exception of the CGTH and UHA[X][S] 30 - 75) are not for residential use.
This document is intended to assist licensed professionals in the exercise of their professional judgment.
Specifications are subject to change without notice.

© 2017 Addison All rights reserved. No part of this work covered by the copyrights herein may be reproduced or copied in any form or by any means - graphic, electronic, or mechanical, including photocopying, recording, taping or information storage and retrieval systems - without the written permission of Addison.

Printed in the USA ADRCADSGNA 0117 Rev D