NOTES:
1. WIRE OVER 24VAC TO BE A MINIMUM OF 16 AWG FLEXING TYPE MTW, 105C, 600V OR EQUIVALENT
   COLORS 115VAC: PHASE-RED, NEUTRAL-WHITE, GROUND-GREEN
   COLORS 24VAC: BLUE
2. CONTROL WIRE TO BE A MINIMUM OF 20 AWG TYPE BELDEN 5401FE CMR 75C SHIELDED OR EQUIVALENT
3. POWER SUPPLY AND MOTOR WIRES TO BE SIZED TO NFPA79, LATEST EDITION
   COLORS ALL VOLTAGES: PHASE(S)-BLACK, GROUND-GREEN

⊘ TERMINALS LOCATED IN CONTROL PANEL ONLY

⊗ TERMINALS LOCATED IN CONTROL PANEL AND CONNECTED TO THE REMOTE PANEL

○ TERMINALS LOCATED IN REMOTE PANEL ONLY

——WIRE(S) LOCATED IN CONTROL PANEL

- - -WIRE(S) LOCATED IN REMOTE PANEL

SHIELDED WIRE(S), ONE END GROUNDED

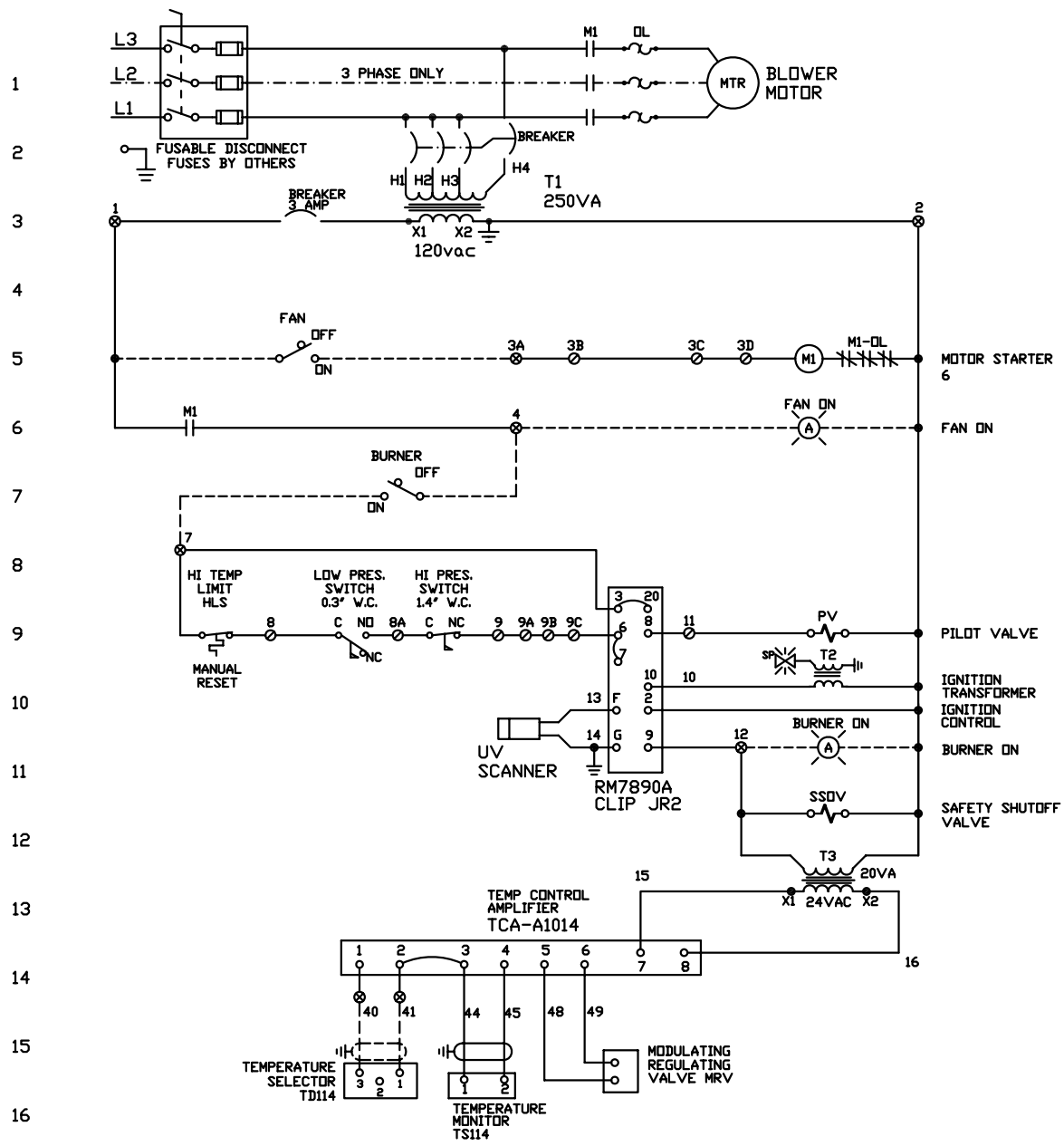

GROUND SHIELDED CABLE AT THE CONTROL PANEL

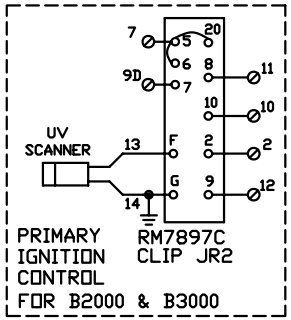

T1 TRANSFORMER
PRIMARY CONNECTION

H1 - 460 USE 1.6 AMP BREAKER
H2 - 230 USE 3.0 AMP BREAKER
H3 - 208 USE 4.0 AMP BREAKER
H4 - COMMON

WIRE CONNECTIONS REMOTE TO MAIN PANEL
1, 2, 3A, 4, 7, 12, 40, 41 (SHIELD)

TITLE: 80025 BASIC II HVAC

DRAWING NUMBER: 80025 REV NUMBER: B DRR-1748
DRAWN BY: S. RICHTER DATE: APR 20, 07
SCALE: NONE SHEET: 1 OF 1