Jan/90

GORDON-RAY II

MODELS
GR2-40 GR2-60
GR2-80

INSTALLATION, OPERATION AND SERVICE INSTRUCTIONS

FOR YOUR SAFETY
Do not store or use gasoline or other flammable vapours and liquids in the vicinity of this or any other appliance.

CONSIGNES DE SÉCURITÉ
Il est interdit d'utiliser des liquides inflammables ou dégageant des vapeurs inflammables, à proximité de tout appareil fonctionnant au gaz.

FOR YOUR SAFETY
If you smell gas:
1. Open windows
2. Don't touch electrical switches
3. Extinguish any open flame
4. Immediately call your gas supplier

APPROVED

CONSIGNES DE SÉCURITÉ
Si vous sentez une odeur de gaz:
1. Ouvrez les fenêtres
2. Ne touchez pas aux interrupteurs électriques.
3. Éteigenez toute flamme nue.
4. Contactez immédiatement votre compagnie de gaz.

FIELD CONVERTIBILITY
"The conversion shall be carried out in accordance with the requirements of the provincial authorities having jurisdiction and in accordance with the requirements of the CAN1-B149.1 and .2 INSTALLATION CODES."

TRANFORMATION
"Toute transformation doit étre effectée conformément aux directives des autorités provinciales compétentes et aux NORMES D'INSTALLATION CAN1-B149.1 ET .2."

Roberts Gordon
Canada, Inc.

241 South Service Road West
Grimsby, Ontario, Canada L3M 1Y7
Telephone (416) 945-5403

Form No. GR2- 4/8-89

GORDON-RAY SPECIFICATIONS
INSTALLATION, OPERATING, SERVICE INSTRUCTIONS

TABLE OF CONTENTS

WARNING: An annual inspection and test, conducted prior to the start of the heating season by qualified gas service personnel, is recommended to verify that the automatic gas ignition system, all associated components and the appliance combustion chamber components operate according to the manufacturer's specifications. Components that have been physically damaged, improperly replaced or otherwise fail to perform their function according to manufacturer's specifications must be replaced immediately to avoid creating a fire, explosive and/or toxic hazards that can result in property damage, personal injury or even death.

INSTALLER -- Please take time to read and understand these instructions prior to any installation.

OWNER -- Keep this manual in a safe place to provide your serviceman with helpful information if the need arises.

INTRODUCTION

UNPACKING THE HEATER

As material is being delivered, check shipment against Bill of Lading for shortages. Also, check for external damage to cartons. Shortages and/or external damage to cartons (see Standard Parts List, page 2) must be noted on the Bill of Lading in the presence of the delivery trucker. The delivery trucker should acknowledge any shortages or damage by initializing this "noted" Bill of Lading.

Claims for damaged material, or shortages that were not evident upon receipt of shipment must be reported to carrier and Roberts-Gordon distributor as soon as they become known.

NOTE: Packing inside burner housing must be removed before installing heater.

IMPORTANT

This heater is designed for heating non-residential indoor spaces. These instructions, the layout drawing, local codes and ordinances, and applicable standards such as apply to gas piping, electrical wiring, venting, etc., must be thoroughly understood before proceeding with the installation.

NATIONAL STANDARDS AND APPLICABLE CODES

Installation of this heater shall comply with local codes and recommendations of the local gas company. All gas piping and connections shall be made in accordance with CAN.1-B149.1 and B149.2 - "Installation Codes for Gas Burning Appliances and Equipment" and/or local codes.

ELECTRICAL GROUNDING

Burner units must be electrically grounded in accordance with the Canadian Electrical Code, C22.1-1982.

HAZARDOUS LOCATIONS

Where there is the possibility of exposure to combustible airborne materials or vapor, consult the local Fire Marshal, the fire insurance carrier or other authorities for approval of the proposed installation.

IMPORTANT

DO NOT USE IN AN ATMOSPHERE CONTAINING HALOGENATED HYDROCARBONS OR OTHER CORROSIVE CHEMICALS.

Some compounds in the air can be ingested into the equipment and cause an accelerated rate of corrosion of some parts of the heat exchanger. The use of such chemical compounds in or near the enclosure should be avoided where a longer life of the burner, tubing and other parts is desirable.

INSTALLER QUALIFICATIONS

All heaters and associated gas piping should be installed in accordance with applicable specifications and this installation made only by firms (or individuals) well qualified in this type of work. Consult local building inspectors, Fire Marshals or the local Roberts-Gordon distributor for guidance.

INSTALLER RESPONSIBILITY

GORDON-RAY™ heaters are installed on the basis of information given in a layout drawing, which together with these instructions and the cited codes and regulations, comprise the basic information needed to complete the installation. The installer must furnish all needed material that is not furnished as standard equipment, and it is his responsibility to see that such materials, as well as the installation methods he uses result in a job that is workmanlike and in compliance with all applicable codes.

Roberts-Gordon distributors have had training and experience in the application of this equipment and can be called on for suggestions about installation which can save material and labor.

GENERAL SPECIFICATIONS

General specifications for GORDON-RAY GR2 heaters are as follows:

RATING:

Model GR2-40
(Natural & LP Gas) - 40,000 BTU/HR. input

Model GR2-60
(Natural & LP Gas) - 60,000 BTU/HR. input

Model GR2-80
(Natural & LP Gas) - 80,000 BTU/HR. input

GAS PRESSURE AT MANIFOLD:

Natural Gas. . . . . 3.5" W.C.
LP Gas. . . . . 10.5" W.C.
Gas connection Size . . . . . 1/2" NPT

GAS INLET PRESSURE:

Gas	Minimum	Maximum
Natural	4.5" W.C.	14.0" W.C.
LP	11.0" W.C.	14.0" W.C.

ELECTRICAL RATING:
Models GR2
120 V - 60 Hz-(2.6 AMP Run) (5.0 AMP Start)

DIMENSIONS:

Flue Connection Size . . . . . 4" O.D.
Refer to Figure 1 on page 3 of these instructions for dimensional information

GORDON-RAY GR2 STANDARD PARTS LIST

DESCRIPTION	PART NO.	QUANTITY (MODEL #)		
		(40)	(60)	(80)
Burner and Control Assembly -GR2 -40 - NATURAL	C3010801	1	--	--
Burner and Control Assembly -GR2 -40 - LP	C3010901	1	--	--
Burner and Control Assembly -GR2 -60 - NATURAL	C3010601	--	1	--
Burner and Control Assembly -GR2 -60 - LP	C3010701	--	1	--
Burner and Control Assembly -GR2 -80 - NATURAL	C3010401	--	--	1
Burner and Control Assembly -GR2 -80 - LP	C3010501	--	--	1
Tube Assembly	030518RG	--	1	1
Tube Assembly	03051600	1	--	--
Reflector	02855300	1	2	2
Hanger 4" (Flue End)	03020700	1	1	1
Hanger 5" (Burner End)	03020701	1	1	1
Reflector Support	03020600	3	6	6
End Cap	77215	2	2	2
"U" Clip Package	91107720	1	1	1
Flue Pipe Adapter	90502700	1	1	1
Turbulator Baffle 10 feet	03051500	--	1	1
Turbulator Baffle 7 feet	03051502	1	--	--
Flexible Gas Connector & Stop Cock Assembly	91412200	1	1	1

For systems components parts lists see figure 12 on page 19.

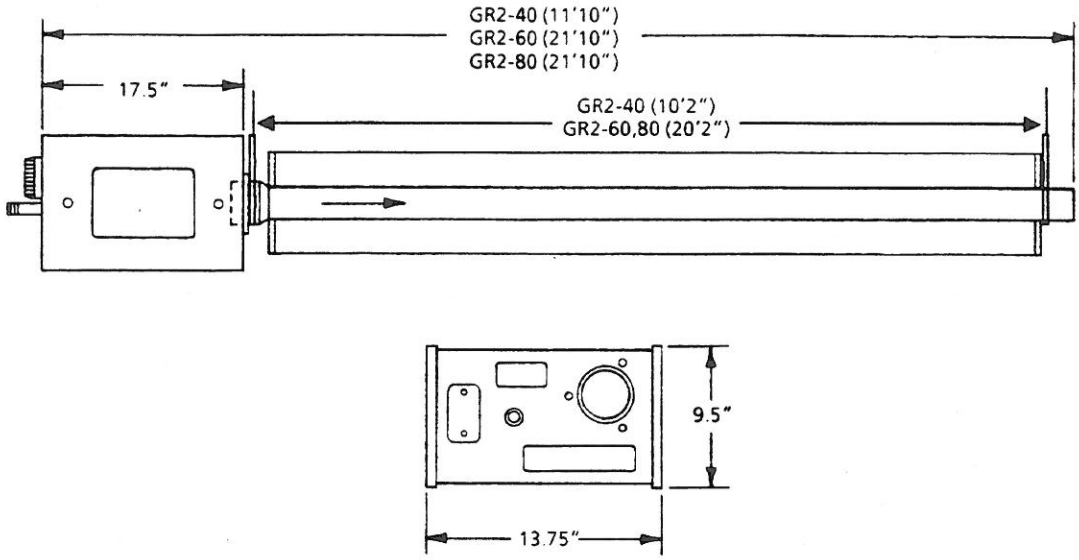

FIGURE 1. GORDON-RAY GR2 SYSTEM DIMENSIONS

INSTALLATION

IMPORTANT

The type of gas appearing on the heater nameplate must be the type of gas used. Read all accompanying literature carefully before proceeding with installation. Allow for adequate clearances around air openings in heater, clearances to combustible materials, accessibility for service, combustion and ventilating air supply as specified in CAN1-B149.1 and B149.2 Installation Codes(see Considerations and Planning Sections Below.).

CRITICAL CONSIDERATIONS

The GORDON-RAY GR2 is a suspended heater which requires that consideration be given to the factors that determine its stability, flexibility, safety, and satisfactory operation. Before starting installation, be sure the following requirements can be met:

- Maintain specified clearances to combustibles, and to heat-sensitive material, equipment and work stations (see Figure 2).
- Provide approved heat-radiation shielding or barriers where needed. Refer to the CAN1-B149.1 and B149.2 Installation Code for guidance.
- Be sure suspension system is sufficiently flexible to accommodate thermal expansion which occurs as the system heats up.
- Provide for adequate clearance between ends of the heater and building walls. See Figure 2, Page 5 for dimensions.
- The heater must be suspended pitched down (one-half inch in 20 ft) away from burner.

HANGING THE HEATER

Suspension straps and "S" hooks provided with the heater should be used as the only suspension points. Chain should be used to support the unit between the ceiling and suspension straps provided. Chain should have a load rating of at least 400 lbs. at each suspension point. For instructions on mounting height and locations of heaters, refer to installation plans of equipment.

Don't -

- Pressure test the gas line using high pressure (greater than 1/2 PSIG) without closing the high pressure shut-off cocks. Failure to do so may result in damage to the burners.

Do -

- Familiarize yourself with local and national codes.
- Develop a planned installation procedure which will conserve material and labor on the job.
- Check to see that all material and equipment is on the job before starting installation.
- Be sure to accommodate thermal expansion of the hot tube.
- INSTALL THE GAS CONNECTOR ONLY AS SHOWN IN INSTRUCTIONS.
- Provide end clearance so tubing won't expand and touch a wall or a structural member.
- Provide access to burner for servicing.
- Provide one square inch of free area air opening for each 1,000 BTU/Hr. of heater input (but not less than 100 square inches) in enclosed spaces. One opening should be within 12 inches of the top and one within 12 inches of the bottom of the enclosure.

CLEARANCE TO COMBUSTIBLES (From Radiant Tube)

Caution must be used when running the system near combustible materials such as wood, paper, rubber, etc. Consideration should be given to partitions, storage racks, hoists, building construction, etc. Figure 2 gives MINIMUM clearances.

WARNING

Minimum clearance from heater must be maintained from vehicles parked below heater.

NOTE: In all situations, clearances to combustibles must be maintained. Signs should be posted in storage areas to specify MAXIMUM stacking height to maintain required clearance to combustibles.

CAUTION: CLEARANCES AS SHOWN ARE NOT FOR USE IN FOUR SIDED ENCLOSURES.

BROODER MINIMUM CLEARANCES TO COMBUSTIBLES

MODEL #	FIGURE #1				FIGURE #2				FIGURE #3				FIGURE #4				FIGURE #5				UNVENTED		VENTED
	A	B	C	D	A	B	C	D	A	B	C	D	A	B	C	D	A	B	C	D	ABOVE	END	END
40,000	6	27	53	27	6	9	53	44	6	15	53	15	7	9	51	42	6	27	53	27	14	18	18
60,000	6	35	63	35	6	9	63	47	6	23	66	23	7	9	60	55	6	35	63	35	14	18	18
80,000	6	38	66	38	6	9	70	54	6	25	72	25	7	9	66	61	6	38	66	38	20	24	18

SPACE HEATING MINIMUM CLEARANCES TO COMBUSTIBLES

40,000	6	23	50	23	6	9	50	35	6	14	52	14	7	9	42	41	6	23	50	23	14	18	18
60,000	6	27	53	27	6	9	55	39	6	20	58	20	7	9	47	46	6	27	53	27	14	18	18
80,000	6	30	59	30	6	9	61	45	6	22	63	22	7	9	53	52	6	30	59	30	20	24	18

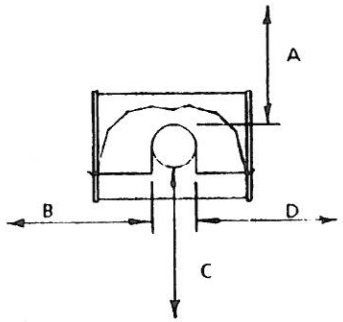

FIG. 1
STANDARD REFLECTOR

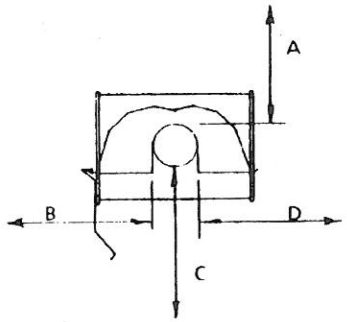

FIG. 2
ONE SIDE EXTENSION

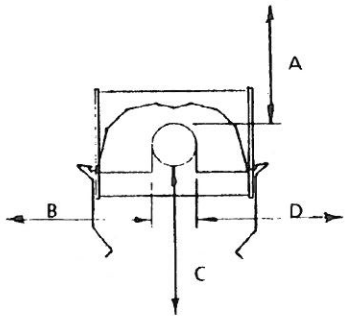

FIG. 3
TWO SIDE EXTENSIONS

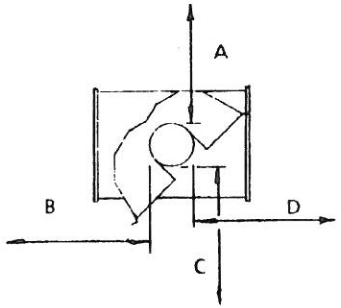

FIG. 4
45° STANDARD REFLECTOR

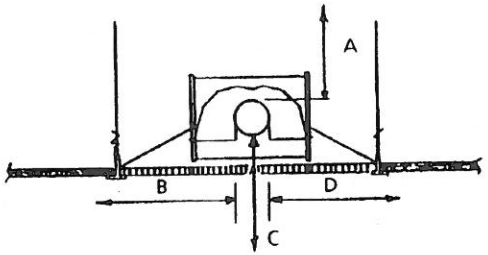

FIG. 5
2 FT. WIDE W/GRILLE

NOTES: IN ALL SITUATIONS CLEARANCES TO COMBUSTIBLES MUST BE MAINTAINED. MINIMUM CLEARANCES MUST BE MAINTAINED FROM VEHICLES PARKED BELOW HEATER. SIGNS SHOULD BE POSTED IN STORAGE AREAS TO SPECIFY MAXIMUM STACKING HEIGHT TO MAINTAIN REQUIRED CLEARANCE TO COMBUSTIBLES.

FIGURE 2. MINIMUM CLEARANCES TO COMBUSTIBLES

VENTING

GENERAL REQUIREMENTS

The venting must be installed in accordance with CAN 1-B149.1 and B149.2 Installation Codes. Partial information relating to this Specification is provided in this section with regard to size and configurations for venting arrangements (see following tables and diagrams). However, it is the responsibility of the installer to make the installation in strict accordance with Codes and provide assurance of proper and safe operation.

Use the following guidelines to help insure an adequate, safe venting arrangement:

- Be sure that method selected for venting heater complies with all codes as required for each particular location.
- Exhaust end of heater will accept a four inch flue pipe using the flue pipe adaptor provided.
- Heater may be vented to the outdoors either vertically or horizontally.
- If heater is to be vented horizontally:

  DO NOT INSTALL VENT TERMINAL:

  - LESS THAN 3 Feet from any building opening.
  - LESS THAN 6 Feet from the combustion air opening of this unit or any other appliance.
  - LESS THAN 3 Feet above grade.
  - OVER a gas utility meter or service regulator.
  - LESS THAN 18" from the outside wall.
- Vent terminal opening must be beyond any combustible overhang.
- If condensation in the flue is a problem, the flue length should be shortened or insulated.
- For vent specifications:

All four (4) of the following conditions must be met.

a.) Maximum vent length allowed is 45 feet.

b.) Maximum intake length allowed is 45 feet.

c.) Maximum total of vent length plus intake length plus optional extension shall not exceed 65 feet.

d.) Maximum of 2 elbows allowed for vent or intake. Subtract 15 feet per elbow from maximum length allowed if additional elbows are used.

IMPORTANT

Heaters should be placed so they will be readily accessible for maintenance.

ALTERNATE ARRANGEMENTS/OPTIONAL EQUIPMENT FOR VENTING

Alternate venting configurations and optional equipment for venting are shown in Figures 3a through 3d.

For horizontal venting (see Figure 3a):

- In noncombustible walls use Roberts-Gordon vent terminal Part No. 58201.
- In combustible walls use the wall thimble Part No. 58122 with the vent terminal.
- Alternate vent terminal Tjernlund VH1-4" (P/N 90502100) may be used in combustible or noncombustible walls. Follow vent manufactures instructions for proper installation.
- Four-inch O.D. flue pipe is required, 30 feet in length is recommended. Up to 45 feet maximum may be used if insulated to prevent excess condensation.
- All flue joints should be sealed using suitable product such as General Electric RTV106 or Permatex Form-a-Gasket Red High Temperature Silicone Adhesive Sealant.
- Vent terminal should be installed at a height sufficient to prevent blockage by snow.
- Building materials should be protected from degradation by flue gases.

For vertical venting (see Figure 3b):

- A four-inch O.D. flue pipe, maximum 45 feet in length may be used as shown with an approved vent cap.
- Type B vent may be used for that portion of the vent system which passes through the roof.
- All flue joints should be sealed using suitable products (see recommendation for horizontal venting).

For common venting (see Figure 3c):

- Horizontal run to vent must never exceed 75% of the vertical height of the vent. (Refer to CAN 1-B149.1 and B149.2 Installation Codes for proper vent sizes and installation.)
- Open area of common vent must equal the sum of the open area of individual flue vents connected to it (see chart on diagram).
- Use double wall vent as required (check codes).
- Heaters sharing a common vent must be controlled by the same thermostat.
- All joints must be sealed using suitable products (see recommendation for horizontal venting).

For unvented operation (see Figure 3d):

- An interlock must be used with exhaust fans to prevent the heater, or heaters from coming on when the exhaust fans are off. This may be done using an air proving switch. Capacity of the exhaust fan must be 300 CFM for every 100,000 BTU/hr. of input.
- The vent terminal must be installed on the unit.
- When installed in adequately ventilated agricultural buildings used ONLY for brooding purposes, the interlock is not required provided that maximum input does not exceed 30 BTU per cubic foot or the input specified by local codes or authorities.
- Use of optional outside combustion air is not recommended with unvented heaters.

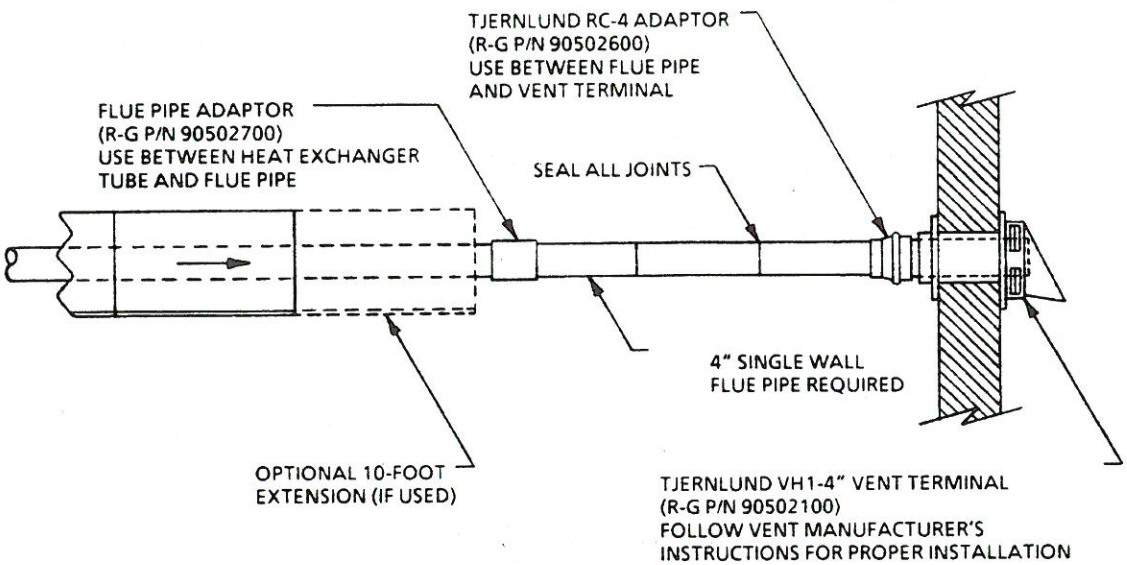

RECOMMENDED FLUE PIPE LENGTH 30 FEET (MINIMUM TWO FEET). UP TO 45 FEET MAXIMUM MAY BE USED IF INSULATED IN ORDER TO PREVENT EXCESSIVE CONDENSATION. LENGTH INCLUDES OPTIONAL 10-FOOT EXTENSION.

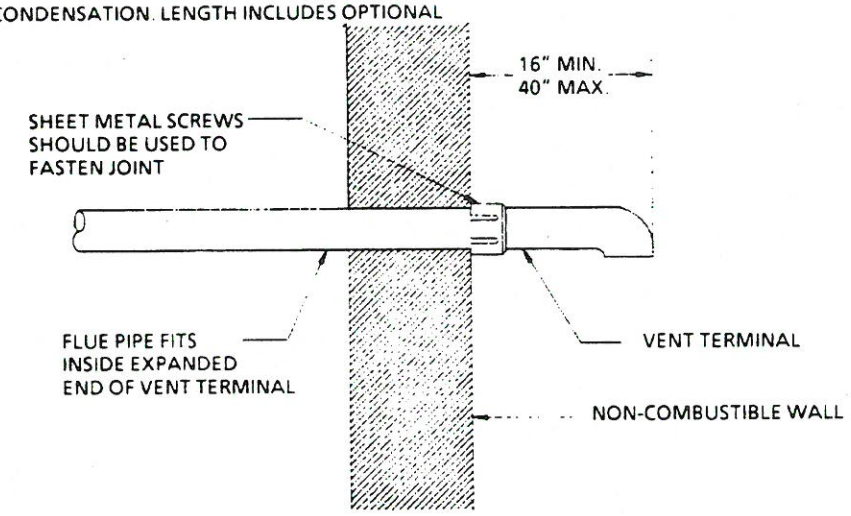

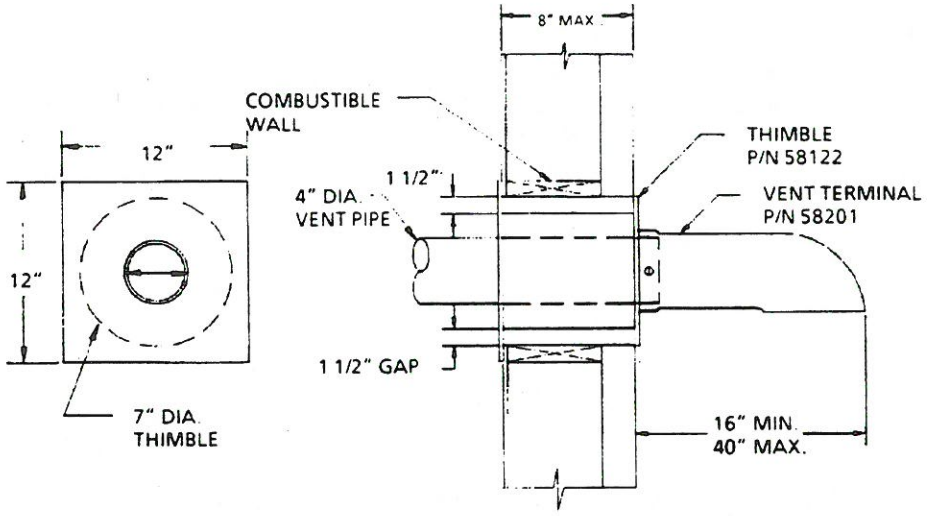

FIGURE 3a. HORIZONTAL VENTING

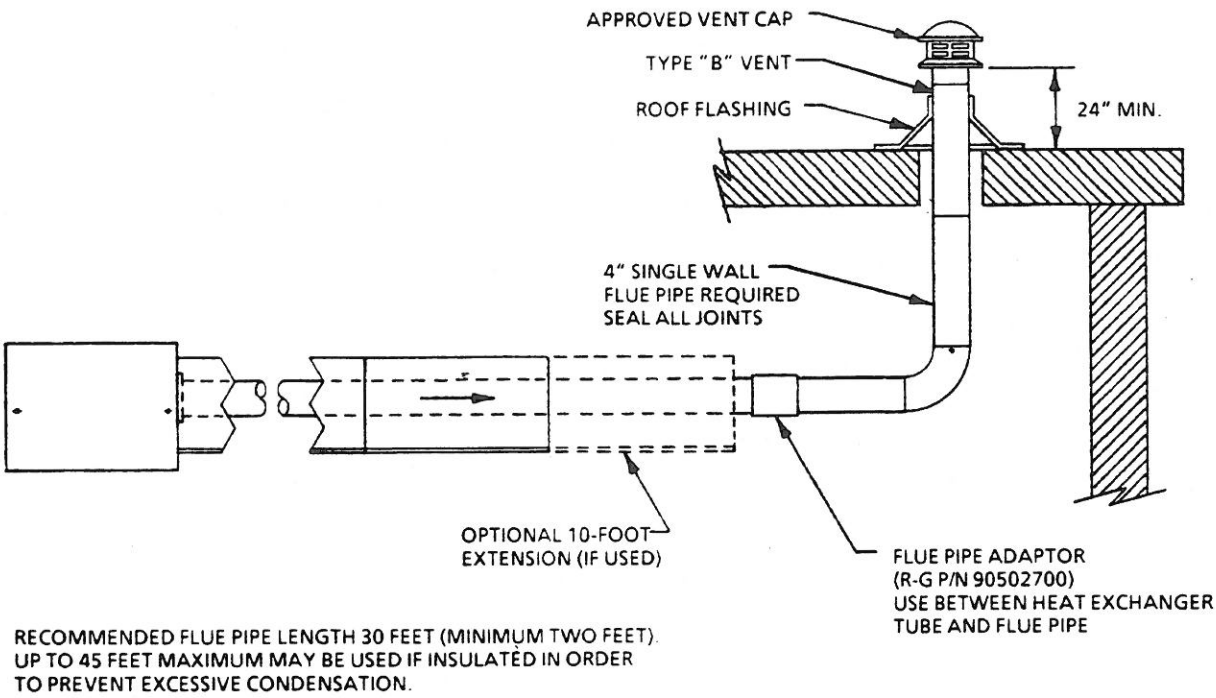

RECOMMENDED FLUE PIPE LENGTH 30 FEET (MINIMUM TWO FEET).
UP TO 45 FEET MAXIMUM MAY BE USED IF INSULATED IN ORDER
TO PREVENT EXCESSIVE CONDENSATION.

Figure 3b. VERTICAL VENTING

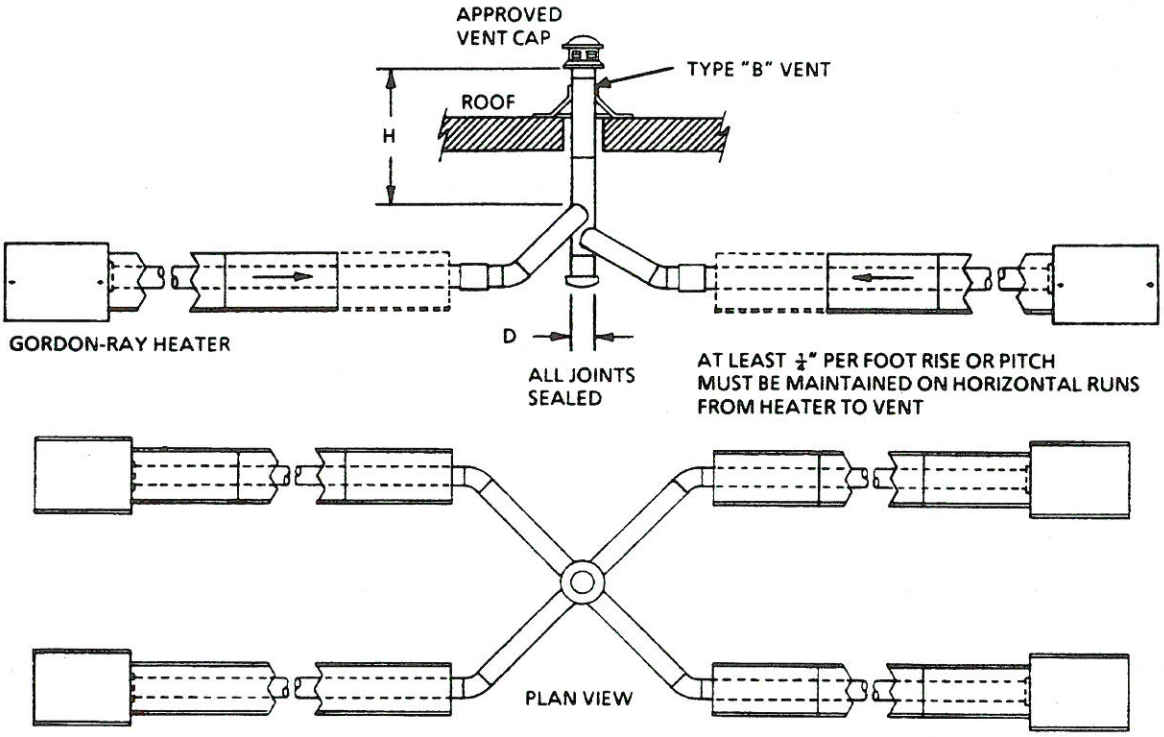

Model Number	No. of Heaters	Stack Height "H" (Min.)		
		6'	8'	15'
		VENT DIA. "D" (MIN.)		
GR2-40	2	6"	5"	5"
GR2-40	4	6"	7"	6"
GR2-60	2	7"	6"	6"
GR2-60	4	10"	10"	8"
GR2-80	2	8"	7"	6"
GR2-80	4	10"	10"	10"

NOTES:

1. HORIZONTAL RUN TO VENT MUST NEVER EXCEED 75% OF THE VERTICAL HEIGHT OF THE VENT. REFER TO CAN 1-B149.1 AND B-149.2 FOR PROPER VENT SIZES AND INSTALLATION (SEE TABLE).
2. HEATERS SHARING A COMMON STACK MUST BE CONTROLLED BY THE SAME THERMOSTAT.
3. CONNECTIONS TO COMMON STACK MUST BE POSITIONED TO AVOID DIRECT OPPOSITION BETWEEN STREAMS OF COMBUSTION GASES.

FIGURE 3c. COMMON VENTING

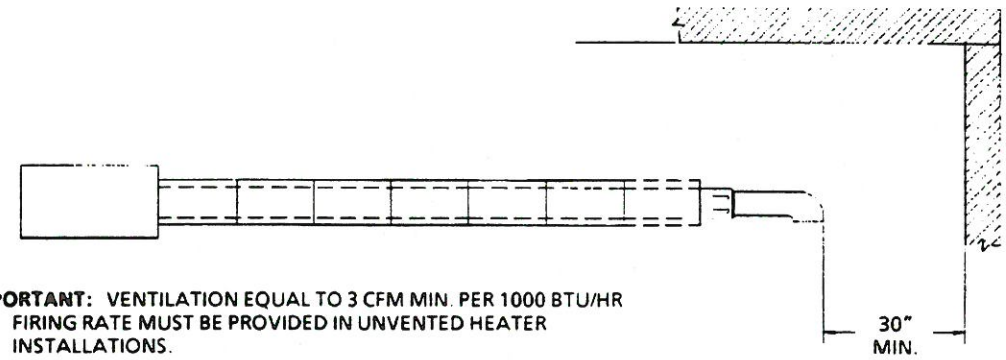

IMPORTANT: VENTILATION EQUAL TO 3 CFM MIN. PER 1000 BTU/HR FIRING RATE MUST BE PROVIDED IN UNVENTED HEATER INSTALLATIONS.

FIGURE 3d. UNVENTED OPERATION

GAS PIPING

All gas piping and connections shall be made in accordance with CAN 1-B149.1 and B149.2 - "Installation Codes for Gas Burning Appliances" and/or local codes.

A drip leg consisting of a tee, nipple, and pipe cap, which forms a trap for dirt and moisture, must be attached to the gas line as shown in Figure 4. A 1/8" N.P.T. plugged tapping, accessible for a test gauge connection, must be supplied immediately upstream of the gas supply connection of the appliance.

The gas line and meter which feeds the heater(s) must be large enough to supply the required gas. If there is any question, check with the gas company.

CAUTION

For high pressure testing on gas piping, COMPLETELY DISCONNECT ALL BURNER UNITS AND THE SHUT-OFF COCKS SUPPLIED WITH SAME; then install pipe cap on system and conduct test. Failure to follow this procedure will exceed pressure rating of burner gas controls and this will require complete replacement of these parts.

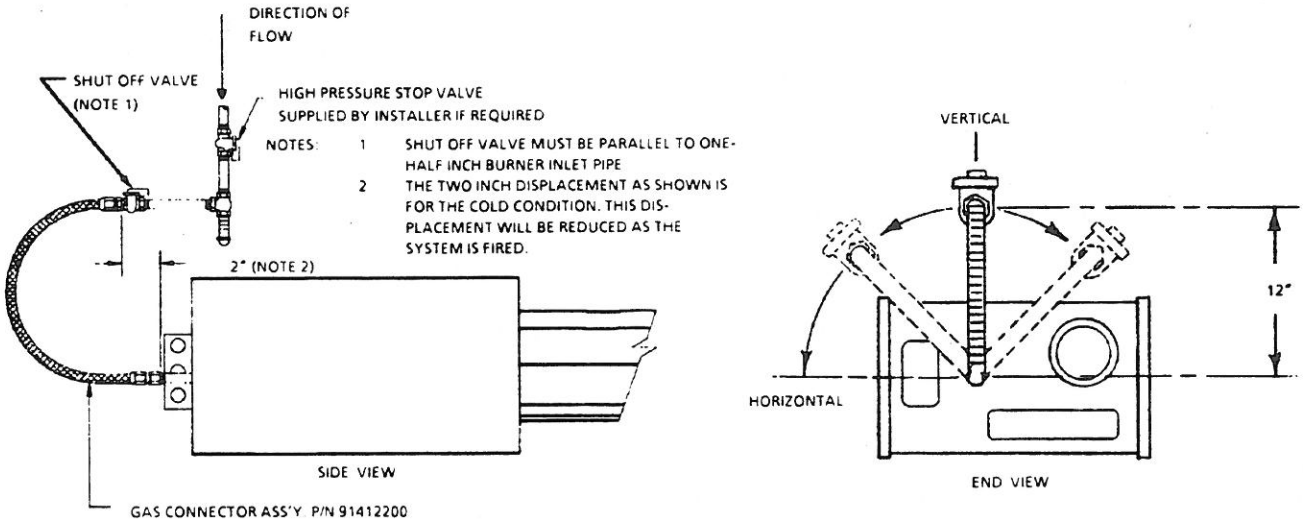

FIGURE 4. GAS LINE CONNECTION TO BURNER WITH FLEXIBLE METALLIC CONNECTOR ASSEMBLY

GAS CONNECTIONS

The purpose of the gas connector from the heater to the gas piping is twofold as follows:

- To facilitate installation and replacement of the burner.
- To accommodate any movement between the heater and the gas piping. See warning below.

The flexible metallic connector assembly, as supplied, must be installed as shown in Figure 4.

Before connecting heaters to the supply system, verify that all high pressure testing of the gas piping has been completed.

WARNING

There is expansion of the radiant pipe with each firing cycle, and this will cause the burner to move with respect to the gas line. This can cause an unsafe condition if the gas connection is not made strictly in accordance with Figure 4.

FIELD WIRING

All electrical wiring and connections shall be made in accordance with the Canadian Electrical Code C22.1-1982 Parts 1 and 2.

Heaters are normally controlled by thermostats (see Figure 5). Line voltage thermostats are wired directly; the recommended 24 volt thermostats use a relay per Figure 6.

Heaters can also be controlled with a manual line voltage switch or timer switch in place of the thermostat.

NOTE If any of the original wire as supplied with the appliance must be replaced, it must be replaced with wiring material having a temperature rating of at least 105° C.

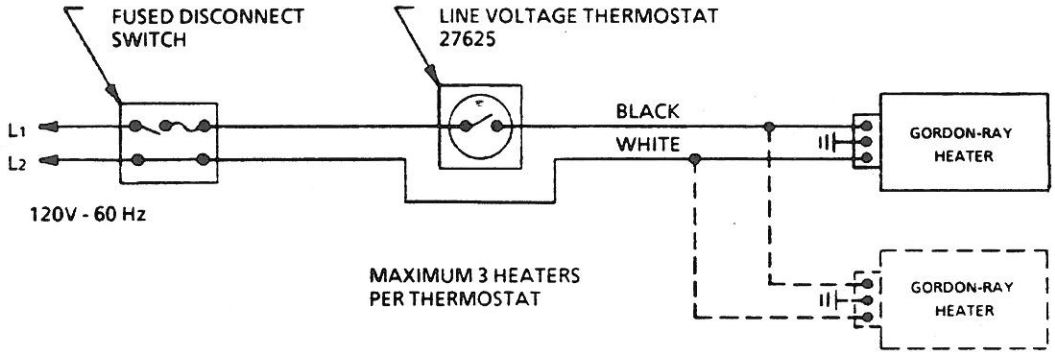

FIGURE 5. WIRING OF LINE VOLTAGE THERMOSTAT

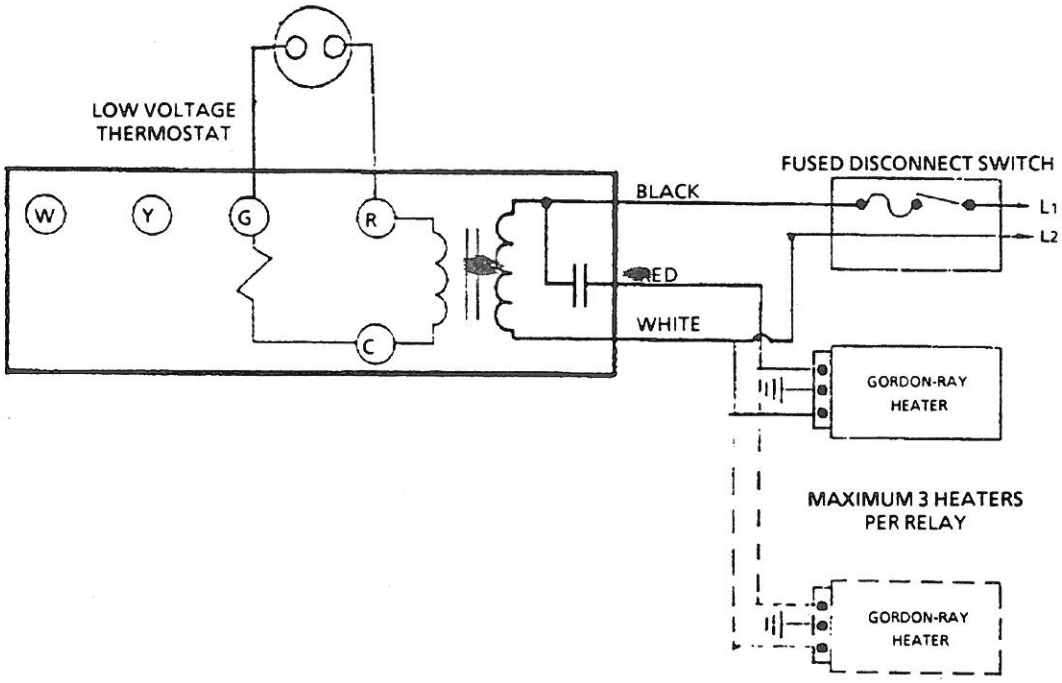

FIGURE 6. WIRING OF LINE VOLTAGE THERMOSTAT AND RELAY

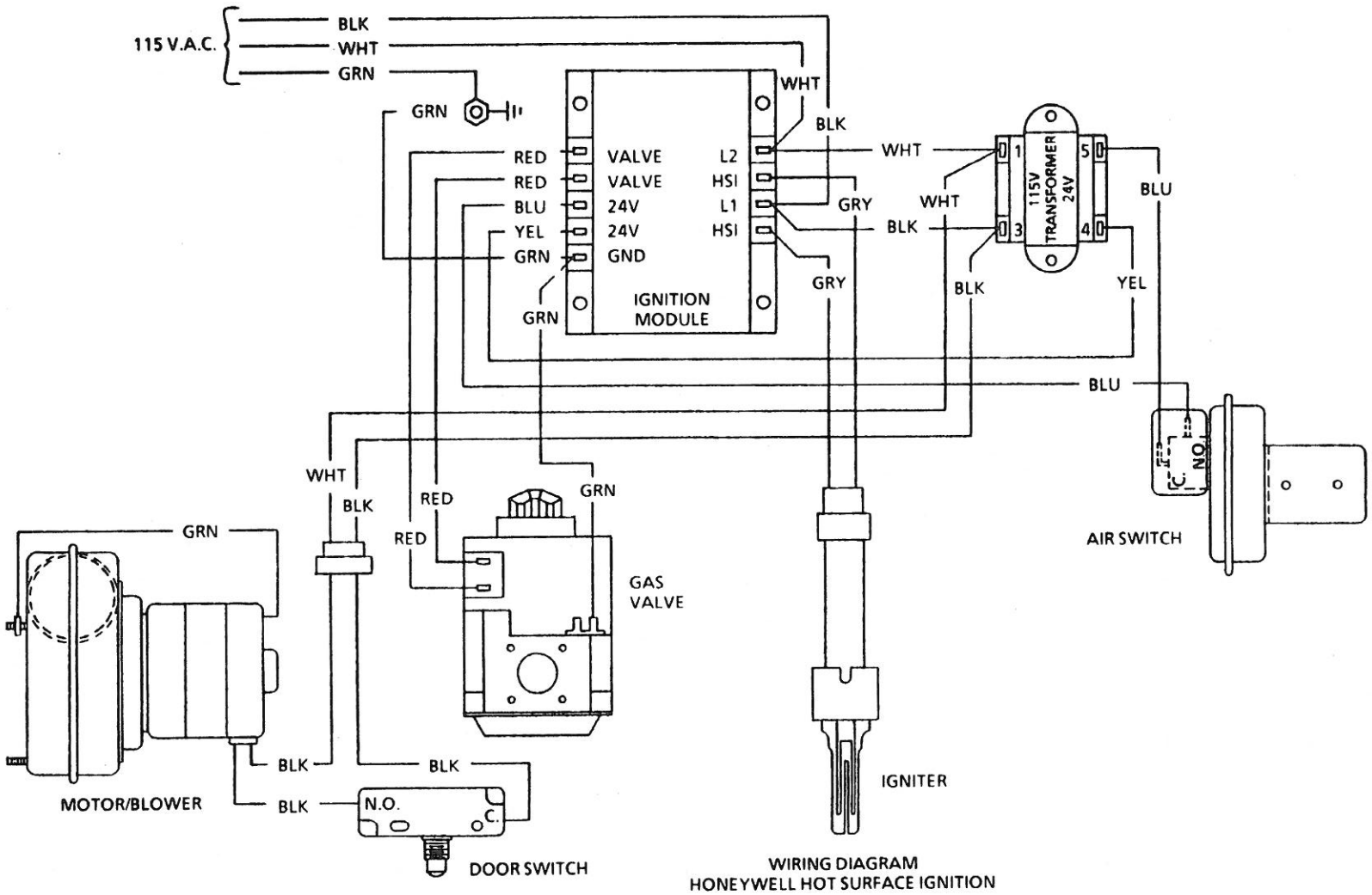

WIRING DIAGRAM
HONEYWELL HOT SURFACE IGNITION

NOTES:

1. IF ANY OF THE ORIGINAL WIRE AS SUPPLIED WITH THE APPLIANCE MUST BE REPLACED, IT MUST BE REPLACED WITH WIRING MATERIAL HAVING A TEMPERATURE RATING OF AT LEAST 105 °C.
2. EACH BURNER MUST BE ELECTRICALLY GROUNDED IN ACCORDANCE WITH STANDARD C-22-1 CANADIAN ELECTRICAL CODE PART 1 AND CSA OR LOCAL CODES.
3. FOR LOW VOLTAGE THERMOSTAT AND/OR PARALLEL BURNER OPERATION SEE WIRING DIAGRAM, FIGURES 5 OR 6, PAGE 12.

FIGURE 7. INTERNAL WIRING DIAGRAM

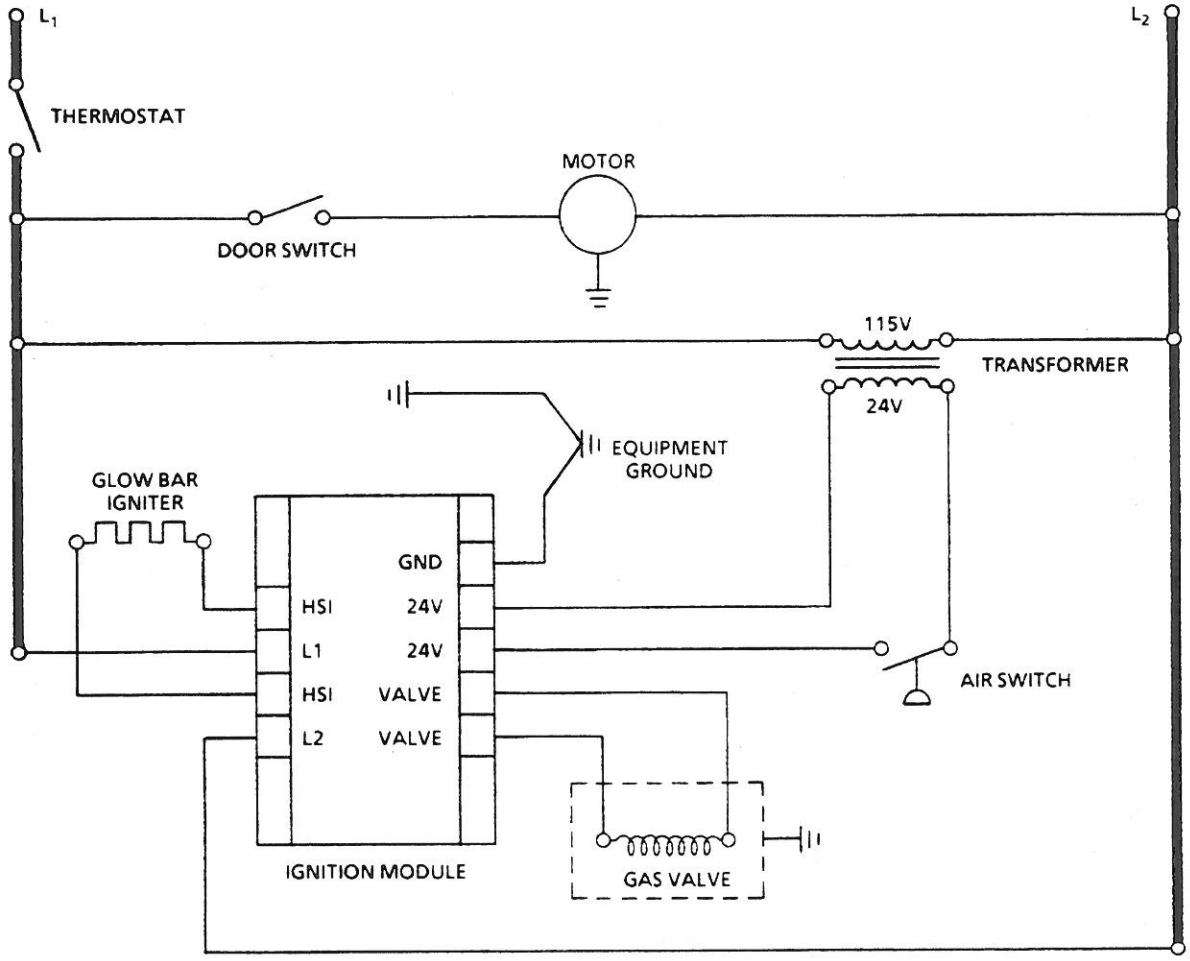

FIGURE 8. HONEYWELL HOT SURFACE IGNITION SYSTEM LADDER DIAGRAM

OPTIONAL EQUIPMENT

OUTSIDE COMBUSTION AIR SUPPLY

The Gordon-Ray heater is approved for installation with an outside air supply system.

Some compounds such as halogenated hydrocarbons or other corrosive chemicals in the air can be ingested into the equipment and cause an accelerated rate of corrosion of some of the heater components. The use of such chemical compounds near the enclosure should be avoided.

IMPORTANT

If the building has a slight negative pressure or contaminants are present in the air, an outside combustion air supply to the heaters is strongly recommended.

A duct of four-inches O.D. single wall pipe may be attached to the heater. The duct may be up to 45 feet in length maximum with no more than two 90° elbows in its total length (see Figure 9). A minimum length of two feet is recommended.

The air supply duct may have to be insulated to prevent condensation on outer surface.

The air inlet vent cap should be securely fastened to the outside wall by drilling four 1/4-inch diameter holes in outside flange; wood screws or bolts and expansion sleeves may be used as a fastening means.

The combustion air inlet should be located at an elevation below the level of the vent terminal or the approved vent cap.

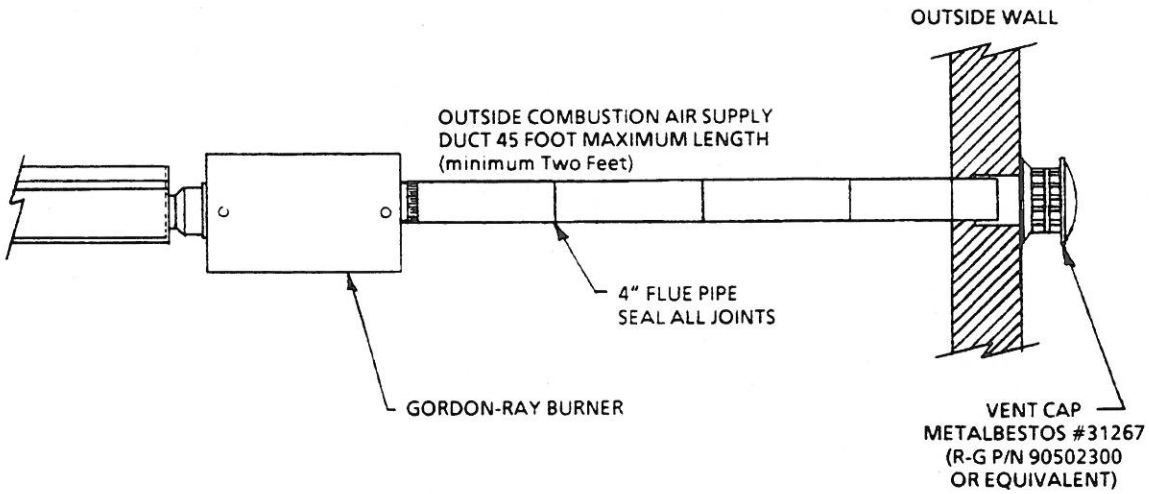

FIGURE 9. OUTSIDE COMBUSTION AIR INSTALLATION

SIDE EXTENSION REFLECTORS

Optional side extension reflectors may be installed on either side of the unit as follows (see Figure 10):

- Attach a reflector side extension support bracket (P/N 77187) to tube as needed. These brackets should be located adjacent to the overlapped joints of the reflector side extension.
- Insert lower edge of reflector side extension in extension support bracket.
- Cut suitable relief notch for each reflector support bracket (P/N 03020600).
- Hook top edge of side extension reflector (P/N 77140) over edge of reflector (P/N 02855300) (see Detail "A").
- A slip joint must be provided in the perimeter side extension at the location of each slip joint in the reflector. The overlap should be the same as the reflector.
- Where severe air movement may be encountered, as at large door, one (1) or two (2) sheet metal screws in each reflector should be used, except where slip joint is required.
- Install at least two brackets (P/N 77198) for each side extension.

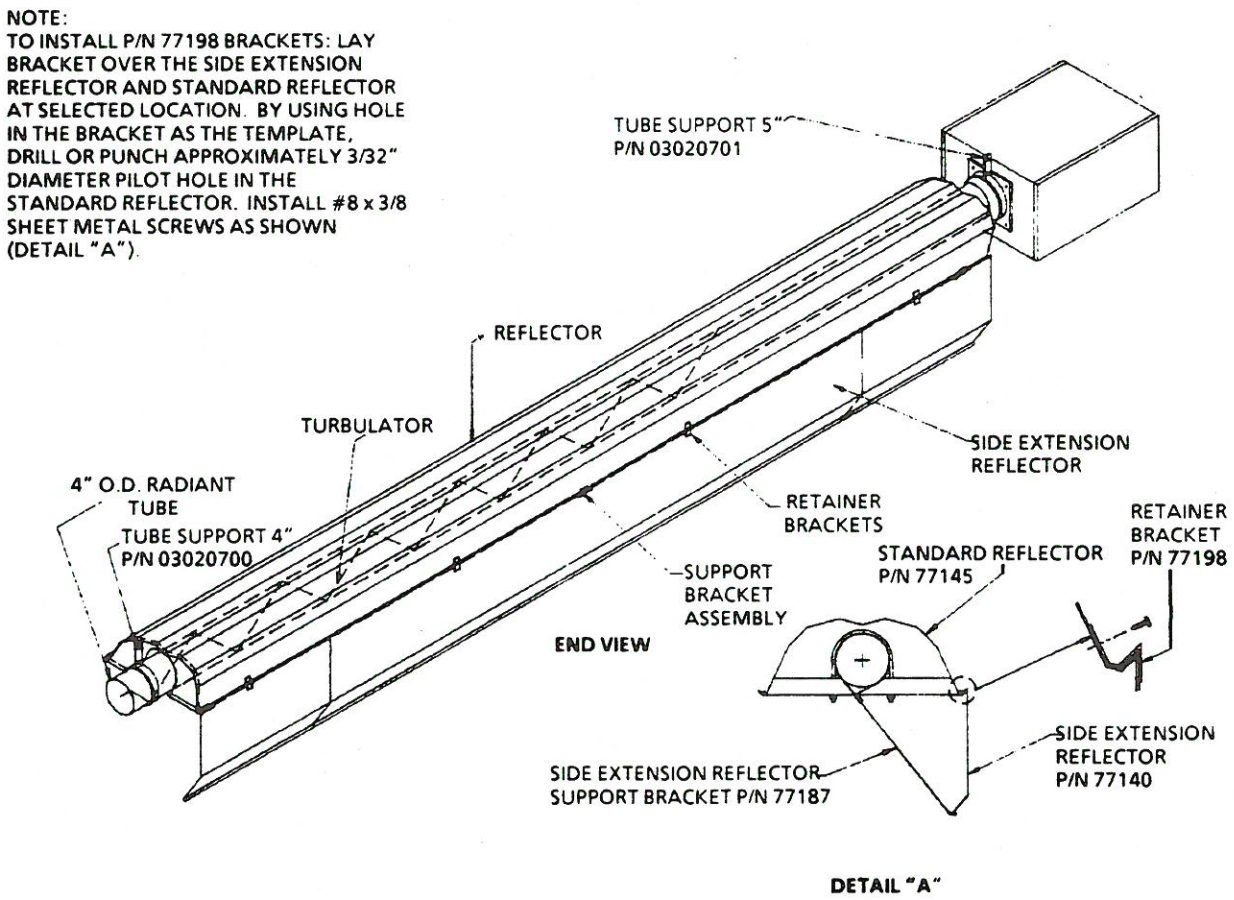

FIGURE 10.

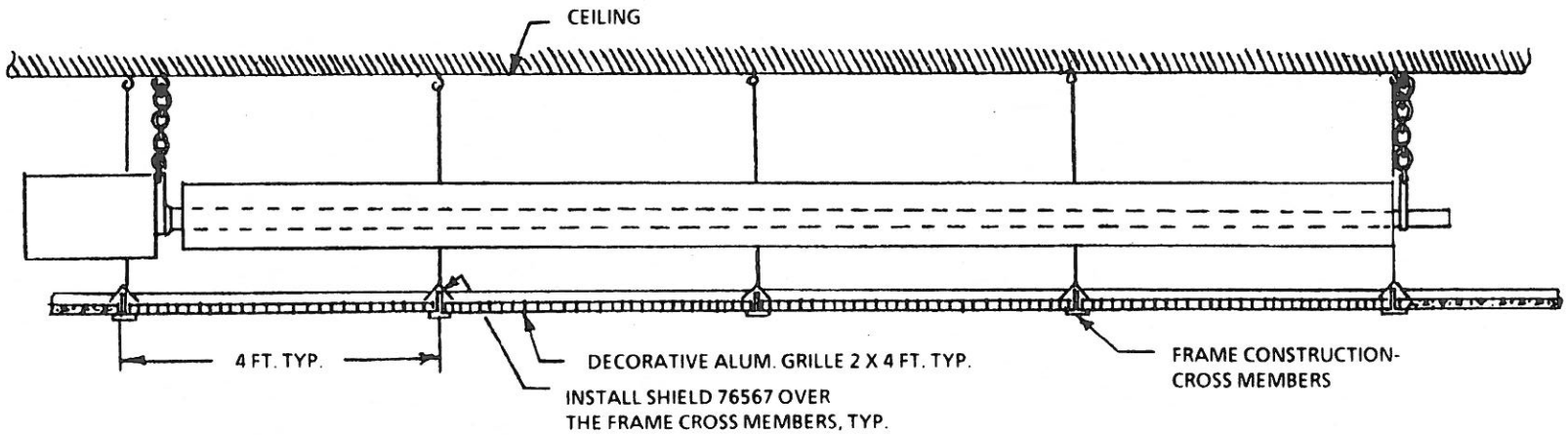

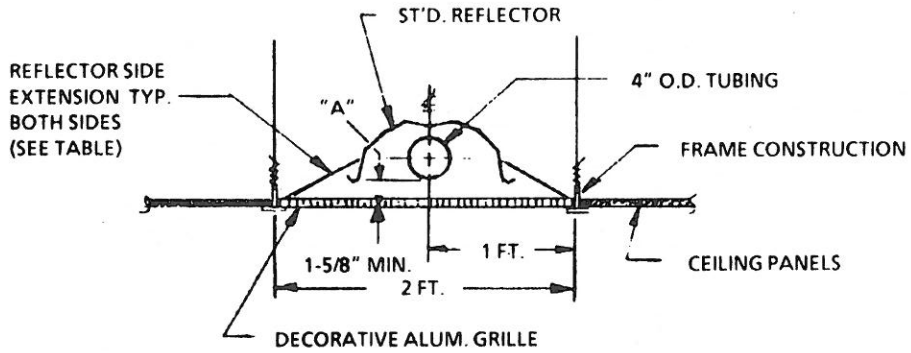

PART NO.	WIDTH	"A"	
		MIN.	MAX.
76588	8"	1.625	5.00
76591	12"	5.000	9.75
76592	16"	9.750	14.24

INSTALLATION OF GORDON-RAY GR2 HEATER
WITH 2 FT. WIDE DECORATIVE GRILLE (OPTIONAL)
Diagram No. 11

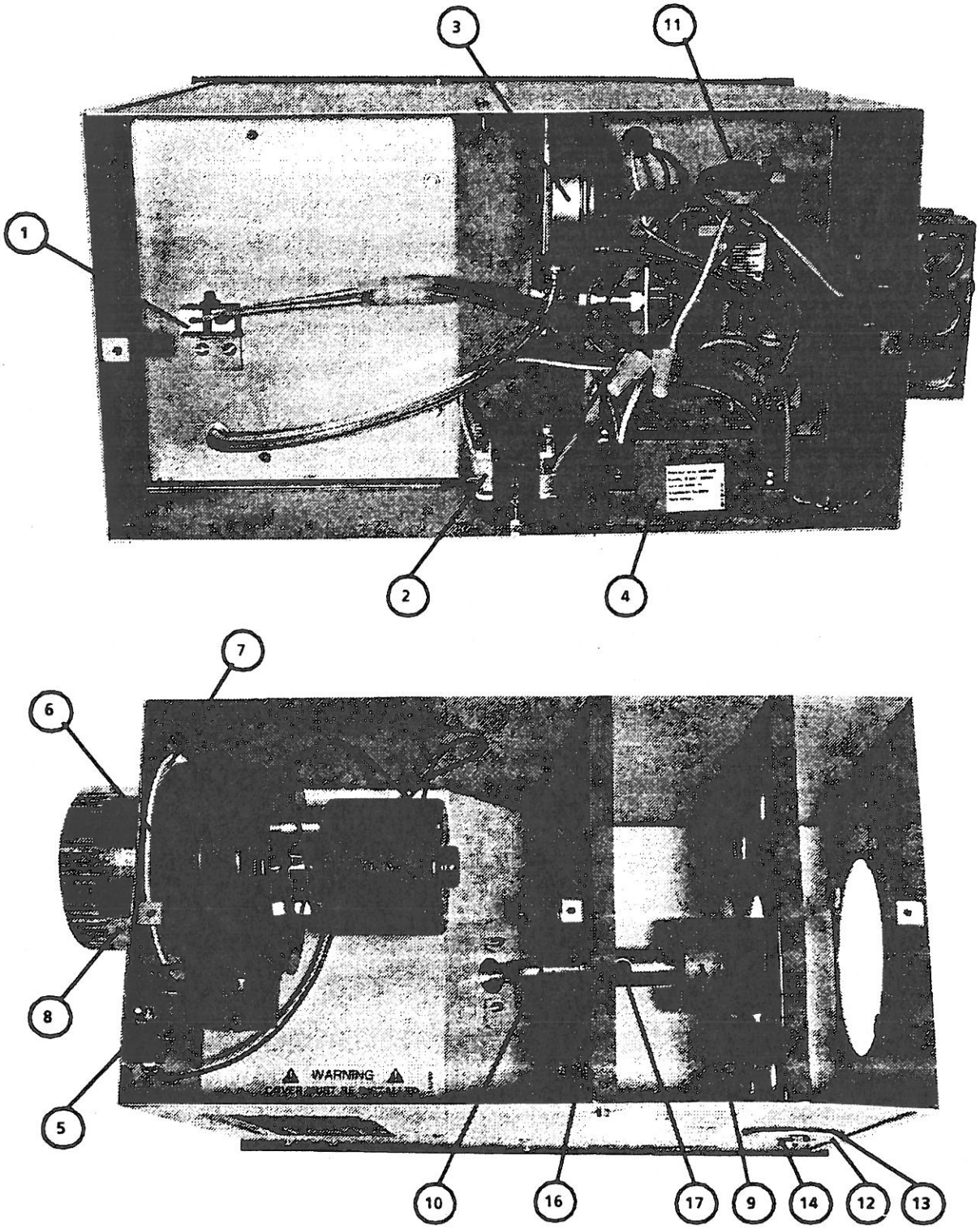

FIGURE 12. GORDON-RAY DS BURNER AND CONTROL HOUSING

GORDON-RAY REPLACEMENT PARTS (REFER TO FIGURE 12)

ITEM	DESCRIPTION	PART No.
1	IGNITER	90435600 or 90436600
2	TRANSFORMER	90435700
3	AIR SENSING SWITCH	
	-GR2-40	90436702
	-GR2-60 & GR2-80	90436700
4	IGNITION MODULE	90436500 or 90435800
5	SWITCH	90436800
6	MOTOR/AIROTOR ASS'Y.	38445
7	BLOWER INLET GASKET	02856200
8	FLUE COLLAR	91911700
9	BURNER CUP ASSEMBLY	03020100
10	MANIFOLD	03090000
11	GAS VALVE	
	-NATURAL GAS	90032500 or 90032400 ← 40'D
	-L.P. GAS	90032501 or 90032401
12	VIEWER RING	53271
13	VIEWER GASKET (2 REQ'D)	52340
14	MICA WINDOW	52350
15	TUBE GASKET	02568200
16	AIR ORIFICE PLATE	
	-GR2-40	03050504
	-GR2-60	03050505
	-GR2-80	03050502
17	ORIFICE	
	-GR2-40 NATURAL GAS	91910432
	-GR2-40 L.P. GAS	91910450
	-GR2-60 NATURAL GAS	91910426
	-GR2-60 L.P. GAS	91910444
	-GR2-80 NATURAL GAS	91910418
	-GR2-80 L.P. GAS	91910437

GORDON RAY OPTIONS

DESCRIPTION	PART No.
Aluminum Grille 2 ft. x 4 ft.	57677
8 Foot Side Extension Reflector	77140
Side Extension Reflector Support	77187
Outside Air Vent Cap	90502300
Vent Terminal - Tjernlund	90502100
Vent Terminal Adapter (use with Tjernlund Vent Terminal)	90502600
Vent Terminal Package (Roberts-Gordon)	58201
Wall Thimble (Use with R-G Terminal)	58122
Line Voltage Thermostat	27625
Low Voltage Thermostat (use with relay 27495)	27654
Relay (use with Low Voltage Thermostat)	27495

SERVICE INSTRUCTIONS

SEQUENCE OF OPERATION (HOT SURFACE IGNITION)

The Gordon-Ray GR2 Heater is equipped with a Hot Surface ignition system. Operation sequence is as follows:

- Thermostat on a call for heat energizes the blower motor.
- When motor approaches nominal running RPM, the air proving switch closes, energizing the control module which acts to power the hot surface igniter for a timed warm up period
- After this warm up period, the gas valve is energized for a timed trial for ignition period.
- During the last part of the trial for ignition period the igniter is de-energized and is converted to a flame rod for a flame sense period.
- If a flame is detected, the gas valve remains open. When the call for heat is satisfied, the gas valves are turned off.
- If no flame is detected on a single-try module, the gas valve is closed, and the module will lockout until it is reset. Reset is accomplished by removing power from the module for 5 seconds.
- If no flame is detected on a three-trial module, the gas valve is closed, and a purge period begins. After the purge, the module acts to power the igniter for a second warm up period, and a second trial for ignition period. If flame is still not established, a third and final, purge, warm up, trial cycle begins, after three trials, three-trial modules will lockout until reset. Reset is accomplished by removing power from the module for 5 seconds.
- If flame is established and lost on a single trial module, the gas valve is closed and a purge, warm up, trial for ignition period will occur. On a three-trial module if flame is established, and lost on the first or second trial, the gas valve is turned off, a purge, warm up, trial for ignition will occur (on a three-trial module only three trials for ignition are allowed per thermostat cycle).

TROUBLESHOOTING

CAUTION

Before removing control housing cover for any type of service to heater, be sure that gas and electric supply to heater are turned OFF.

NO POWER TO HEATER:

1. Check to see that thermostat is calling for heat.
2. Check for blown fuse in electrical supply to heater.
3. Check for power on hot and neutral leads entering heater junction box.
4. Check for loose or broken wire at heater junction box.

BLOWER MOTOR FAILS TO RUN:

1. Check for loose or broken wires from motor to hot and neutral leads entering heater junction box.
2. Check to see if blower impeller turns freely; it may be hitting blower housing or motor shaft may be seized. Adjust to free impeller or repair or replace blower motor.
3. Check for loose or broken wires on door interlock switch.

NO POWER AT CONTROL MODULE:

1. Check line voltage power to transformer.
2. Check low voltage from transformer.
3. Check air proving switch.
4. Check thermostat.
5. Replace hot surface module

NO POWER TO HOT SURFACE IGNITER:

With gas to heater turned off, set thermostat above room temperature. When blower motor attains running speed the air proving pressure switch energizes the control module energizing the hot surface igniter. The hot surface igniter may be observed looking through the observation window of the burner housing.

Igniter should appear a bright orange glow.

Igniter glow duration is approximately 20 seconds, recycling of the thermostat may be necessary for observation purposes if no igniter glow appears.

1. Check for 120V to hot surface igniter.
2. Replace control module
3. Replace broken or shorted hot surface igniter.

Note: If control module goes into lockout, reset system.

MAIN BURNER DOES NOT LIGHT:

1. Check for 24 volts across valve and valve terminals on control module during lockout time, if no voltage, replace module.
2. Check igniter position.
3. Check electrical connections between control module and gas control, if okay replace gas control.

Note: If control module goes into lockout, reset system.

MAIN BURNER DOES NOT STAY LIT:

1. Check continuity of ground wire.
2. Make sure L1 and L2 are not reversed. This would prevent flame detection.

NO GAS PRESENT

Set thermostat above room temperature. When blower attains running speed, air proving pressure switch energizes main gas valve. If no gas flow or flame is established:

1. Check to see that manual gas supply valve to heater is ON.
2. Check to see that dial knob on redundant valve in control housing is turned to ON.
3. Check for gas pressure at 1/8" NPT Gauge tapping upstream of burner control.
4. Check for loose or broken wire leads from air proving pressure switch.
5. Check for loose or broken wire leads from gas valve to circuit board.
6. Replace defective gas valve.
7. Replace hot surface ignition module. Module is not field repairable.

MAINTENANCE

For best performance, maintenance procedures should be performed before each heating season.

- Be sure gas and electric supply to heater are turned OFF before performing any service or maintenance on heater.
- Check condition of blower scroll and motor. Dirt and dust may be blown out with compressed air or a vacuum cleaner may be used.
- Remove burner and check its condition (see below). Clean or replace as necessary.
- Make visual check of hot surface igniter. Replace if there is excessive carbon residue, erosion, breakage or other defects.
- Check to see that burner observation window is clean and free of cracks or holes. Clean or replace as necessary.
- Check inside of firing tube with flashlight. If carbon or scale are present, scrape out deposits with wire brush on rod or metal plate attached to wooden pole.
- Check flue pipe for soot or dirt or any obstruction to the outdoors. After cleaning as necessary, reattach flue pipe.
- Outside surfaces of heater may be cleaned with damp cloth.
- Check for leaks with soap solution on any pipe joints that were disconnected during maintenance procedure before putting heater back in service.
- Check performance of heater and visually observe flame for proper flame characteristics.
- A qualified service agency should be contacted for service other than routine maintenance.

PROCEDURE TO REMOVE BURNER CUP

- Remove housing doors.
- Remove screw holding hot surface igniter in place and remove igniter. -Remove burner cup from housing by unscrewing counter clockwise from manifold threads.
- To reassemble, reverse above steps.

FIELD CONVERTIBILITY

This heater has been approved for use with natural gas or propane. A conversion kit is available to convert this unit to the alternate fuel.

THE CONVERSION SHALL BE CARRIED OUT IN ACCORDANCE WITH THE REQUIREMENTS OF THE PROVINCIAL AUTHORITIES HAVING JURISDICTION AND IN ACCORDANCE WITH THE CAN 1-B149.1 AND .2 INSTALLATION CODES.

When Converting This Product:

1. Read these instructions carefully. Failure to follow them could damage the product or cause a hazardous condition.
2. Installer must be trained, experienced service technician.
3. After installation is complete, check for gas leaks before heater is placed in automatic operation.

WARNING:

Failure to follow these instructions could result in a fire or explosion causing property damage, personal injury or loss of life.

Disconnect power supply before beginning installation to prevent electrical shock or equipment damage.

To avoid dangerous accumulation of fuel gas, turn off gas supply at the appliance service valve before starting the conversion and perform a gas leak test after completion of the conversion.

1. Disconnect the gas supply from the heater.
2. Remove the housing covers.
3. Remove the burner. (See Page 22 of the Installation Manual).
4. Install the orifice supplied in the conversion kit.
5. Convert the gas valve to the appropriate fuel. This must be done in accordance with the control manufacturer's instructions provided with the conversion kit.
   WHEN ORDERING A CONVERSION KIT, THE CONTROL VALVE MANUFACTURER MUST BE SPECIFIED.
   EXAMPLE: HONEYWELL, ROBERTSHAW OR WHITE-ROGERS.
6. Re-assemble the heater. Make certain all screws are tightened and all wires are connected.
7. Perform gas leak test.
8. Check gas valve outlet pressure with a manometer or by clocking the meter.
9. Replace all covers and fasten securely.
10. Complete the conversion data label and affix to the heater adjacent to the rating plate.

This appliance has been converted to _____
Orifice _____
Manifold Pressure _____
Input _____
Cet appareil a été converti au _____
Injecteur _____
Pression à la tubulure d'alimentation _____
Débit calorifique _____

ORIFICE CHART

P/N	NAT	LP	INPUT
91910432	*		40,000
91910426	*		60,000
91910418	*		80,000
91910450		*	40,000
91910444		*	60,000
91910437		*	80,000

Quality

What you should know about Roberts-Gordon

- Pioneer developer and manufacturer of low-intensity gas-fired infrared heaters and heating systems.
- More than 60 years experience in the heating equipment industry.
- We cherish and work hard to protect our reputation for quality products.

Roberts Gordon
Canada, Inc.