FOR YOUR SAFETY
If you smell gas:

1. **Open windows.**
2. **DO NOT try to light any appliance.**
3. **DO NOT use electrical switches.**
4. **DO NOT use any telephone in your building.**
5. **Extinguish any open flame.**
6. **Leave the building.**
7. **Immediately call your local gas supplier after leaving the building. Follow the gas supplier's instructions.**
8. **If you cannot reach your gas supplier, call the Fire Department.**

⚠ WARNING

Fire Hazard

Keep all flammable objects, liquids and vapors the minimum required clearances to combustibles away from equipment.

Some objects will catch fire or explode when placed close to equipment.

Failure to follow these instructions can result in death, injury or property damage.

⚠ WARNING

Improper installation, adjustment, alteration, service or maintenance can result in death, injury or property damage. Read the Installation, Operation and Service Manual thoroughly before installing or servicing this equipment.

Installation must be done by a contractor qualified in the installation and service of gas-fired heating equipment or your gas supplier.

NOT FOR RESIDENTIAL USE

Intertek

Rapid® 2000-Series

Direct, Gas-Fired, Commercial Air Handler

Installation, Operation & Service Manual

2005
2010
2010B
2020
2030

Installer

Please take the time to read and understand these instructions prior to any installation. Installer must give a copy of this manual to the owner.

Owner

Keep this manual in a safe place in order to provide your service technician with necessary information.

Rapid Engineering LLC
1100 Seven Mile Road NW
Comstock Park, MI 49321
Telephone: +1.616.784.0500
Fax: +1.616.784.0435
Toll Free: 800.536.3461

www.rapidengineering.com

© 2017 Rapid Engineering LLC

P/N RP121100NA Rev J 4/17

POUR VOTRE SECURITE
Si vous sentez une odeur de gaz:

1. **Ouvrir les fenêtres.**
2. **N'essayer pas d'allumer un appareil.**
3. **N'utiliser pas d'interrupteurs électriques.**
4. **N'utiliser pas de téléphone dans votre bâtiment.**
5. **Eteindre flamme nue.**
6. **Quitter le bâtiment.**
7. **Après avoir quitté le bâtiment, appelez immédiatement votre fournisseur local de gaz.**
   Suivre les instructions du fournisseur de gaz.
8. **Si vous ne pouvez pas joindre votre fournisseur de gaz, appeler le service d'incendie.**

⚠ AVERTISSEMENT

Risque d'incendie

Garder tous les objets, liquides ou vapeurs inflammables à la distance minimale de l'unité de chauffage requise avec les matériaux combustibles.

Certains objets prendront feu ou exploseront s'ils sont placés à proximité de l'unité de chauffage.

Le non respect de ces instructions peut entraîner la mort, des blessures corporelles ou des dommages matériels.

⚠ ATTENTION

L'installation, l'ajustement, l'altération, le démarrage ou l'entretien inadéquat peuvent causer la mort, des blessures ou des dégâts matériels. Lire entièrement le manuel d'installation, d'opération et d'entretien avant l'installation ou l'entretien de cet équipement.

L'installation doit être effectuée par un installateur éprouvé/contractant qualifié dans l'installation et la maintenance du système de chauffage par infrarouge activé au gaz.

Rapid Engineering LLC

Rapid® 2000-Series

L'appareil de traitement de l'air à combustion directe, au gaz pour les applications commercial

2005
2010
2010B
2020
2030

Installateur

Prenez le temps de lire et comprendre ces instructions avant toute installation.
L'installateur doit remettre au propriétaire un exemplaire de ce manuel.

Propriétaire

Gardez ce manuel dans un endroit sûr pour fournir des informations au réparateur en cas de besoin.

Conçus pour les applications non-résidentielles

C ETL CM US LISTED
Intertek

Rapid Engineering LLC
1100 Seven Mile Road NW
Comstock Park, MI 49321
Téléphone: +1.616.784.0500
Fax: +1.616.784.0435
Numéro sans fraís: 800.536.3461

www.rapidengineering.com

© 2017 Rapid Engineering LLC

P/N RP121100FC Rev J 4/17

TABLE OF CONTENTS

SECTION 1: Air Handler Safety 1
1.1 Description of Operation 1
1.2 Inspection and Setup 1
1.3 Safety Labels and Their Placement 2
1.4 California Proposition 65 2
SECTION 2: Installer Responsibility 3
2.1 Wall Tag 3
2.2 Corrosive Chemicals 3
2.3 National Standards and Applicable Codes 4
2.4 Required Equipment 4
SECTION 3: Critical Considerations 5
3.1 Required Clearances to Combustibles 5
3.2 Purge of Supply Duct 6
3.3 Hardware 6
SECTION 4: National Standards and Applicable Codes 7
4.1 Gas Codes 7
4.2 Installation Codes 7
4.3 Aircraft Hangars 7
4.4 Parking Structures and Repair Garages 7
4.5 Electrical 7
4.6 Venting 7
4.7 High Altitude 7
SECTION 5: Specifications 8
SECTION 6: Lifting an Air Handler 10
6.1 Lifting an Air Handler 10
SECTION 7: Roof Curb 12
7.1 Roof Curb Assembly and Installation 12
7.2 Air Handler Mounting to Roof Curb 14
SECTION 8: Legs For Horizontal Mounting 15
8.1 Leg Mounting 15
8.2 Leg Mounting - Horizontal Air Handler 15
SECTION 9: Upright Installation 16
9.1 Upright Leg Assembly 16
9.2 Upright Installation 16
9.3 Attaching Air Handler 16
SECTION 10: Filter Section 21
10.1 Filter Section Support Assembly Installation (2010 - 2030) 21
10.2 Filter Section Installation - Horizontal Air Handlers 22
10.3 Filter Section Installation - Upright Air Handlers 22
SECTION 11: Inlet Hood 23
11.1 Inlet Hood Assembly 23
SECTION 12: Dampers 30
12.1 Discharge Damper 31
12.2 Inlet Damper 31
SECTION 13: Discharge Heads and Splash Plates 32
13.1 Three-Way Discharge Head Installation 32
13.2 Splash Plate Installation 33
SECTION 14: Duct Considerations 35
14.1 Inlet Duct Work 35
14.2 Return Duct Work 35
14.3 Discharge Duct Work 35
SECTION 15: Gas Piping 36
15.1 Gas Manifolds 36
15.2 Gas Piping and Pressures 36
15.3 Gas Manifold Venting 36
15.4 Gas Piping 39
15.5 Pressure Test Ports 39
15.6 Line Pressure Test - Leak Testing 39
SECTION 16: Electrical 40
16.1 Disconnect Fuse Sizing 41
16.2 Wiring and Electrical Connections 41
16.3 Remote Panel 41
16.4 Motor Current Draw 41
16.5 Control Current Draw 42
16.6 Safety Systems 42
16.7 Interlocks 45
16.8 Control Options 45
SECTION 17: Sequence of Operation 47
17.1 Air Handler Configuration 47
17.2 HVAC Remote Panels and Panel Options 49
17.3 Basic Air Handler Sequence of Operation 51
SECTION 18: Direct Fired Burner 55
18.1 Direct Fired Burner Ignition 56
18.2 Direct Fired Burner Flame Proving (Flame Rod) 57
SECTION 19: Direct fired process air heaters 58
19.1 Direct Fired Process Air Heater Models 59
19.2 Installer's Responsibilities 59
19.3 Installer's Responsibility for Process Heaters Connected to Paint Booths 60
SECTION 20: Start-up Procedures 61
20.1 Installation of Recirculating Air Handler 62
20.2 Mechanical 62
20.3 Electrical 63
20.4 Airflow 63
20.5 Gas Piping and Initial Pressure Settings 64
20.6 Safety Shut Off Valve Check 66
20.7 Temperature Control System Calibration 66
SECTION 21: Maintenance 69
21.1 General 70
21.2 Unit Exterior 70
21.3 Blower Section 70
21.4 Manifold and Controls 73
21.5 Burner 73
21.6 Optional Equipment 74
SECTION 22: Replacement Parts 75
SECTION 23: Troubleshooting 79
23.1 Initial Checks 80
23.2 Motor and Blower 80
23.3 Burner 81
23.4 Temperature Controls 82
23.5 A1014 Amplifier - Field Checklist 83
23.6 A44 Amplifier - Field Service Checklist 85
SECTION 24: RAPID® 2000-Series Start-Up Procedures 87
SECTION 25: The RAPID® 2000-Series Warranty 89

© 2017 Rapid Engineering LLC

All rights reserved. No part of this work covered by the copyrights herein may be reproduced or copied in any form or by any means - graphic, electronic, or mechanical, including photocopying, recording, taping or information storage and retrieval systems - without the written permission of Rapid Engineering LLC.

Printed in the U.S.A.

SECTION 1: AIR HANDLER SAFETY

Your Safety is Important to Us! This symbol is used throughout the manual to notify you of possible fire, electrical or burn hazards. Please pay special attention when reading and following the warnings in these sections.

Installation, service and, at a minimum, annual inspection of air handlers must be done by a contractor qualified in the installation and service of gas-fired heating equipment.

Read this manual carefully before installation, operation or service of this equipment.

This air handler is designed for heating non-residential indoor spaces. Do not install in residential spaces. These instructions, the layout drawing, local codes and ordinances and applicable standards that apply to gas piping, electrical wiring, ventilation, etc. must be thoroughly understood before proceeding with the installation.

Protective gear is to be worn during installation, operation and service in accordance to the Occupational Safety and Health Administration (OSHA). Gear must be in accordance to NFPA 70E, latest revision when working with electrical components. Thin sheet metal parts have sharp edges. To prevent injury, the use of work gloves is recommended.

Before installation, check that the local distribution conditions, nature of gas and pressure and adjustment of the appliance are compatible.

The equipment must be applied and operated under the general concepts of reasonable use and installed using the best building practices.

This piece of equipment is not intended for use by persons (including children) with reduced physical, sensory or mental capabilities, or lack of experience and knowledge, unless they have been given supervision or instruction concerning use of the equipment by a person responsible for their safety.

Children should be supervised to ensure that they do not play with the equipment.

For additional copies of the Installation, Operation and Service Manual, please contact Rapid Engineering LLC.

Gas-fired equipment is not designed for use in atmospheres containing flammable vapors or dust or atmospheres containing chlorinated or halogenated hydrocarbons. Recirculated room air may be hazardous if containing flammable solids, liquids, and gases; explosive materials; and/or substances which may become toxic when exposed to heat (i.e. refrigerants, aerosols, etc.).

1.1 Description of Operation

This air handler is a direct, gas-fired, fresh-air piece of equipment. It is designed for indoor or outdoor installation with fresh outdoor air delivered to the burner. Air handlers are designed to operate in temperatures as low as -30° F (-34° C). The air handler is factory-tested to fire with natural gas or LPG (check the air handler's rating plate for information on the appropriate gas). The burner flame will modulate to maintain the selected discharge air temperature or room air temperature, depending on the selected controls. *See Page 49, Section 17.2*. For maximum temperature rise, *See Page 66, Table 18*.

The air handler may be provided with several different controls and options to meet various application requirements. Be sure to read this entire manual before installation and start-up.

1.2 Inspection and Setup

The air handler is shipped fully assembled. The air handler was inspected and operated prior to shipment. Immediately upon receipt of the air handler, check the fuel and electrical characteristics of the air handler and verify that they match the fuel and electrical supply available. Verify that the specifications on the air handler rating plate match the order. Check the air handler for any damage that may have occurred during shipment. If any damage is found, file a claim with the transporting agency. Do not refuse shipment. Check the installation location to ensure proper clearances to combustibles. *See Page 5, Section 3.1*.

Any small options which do not come attached to the air handler (i.e. remote panel) will be found inside the air handler.

Larger accessories (i.e. legs, stand, filter section, inlet hood) may either ship with the air handler or separately. Check the bill of lading for information.

If the air handler must be temporarily stored (i.e. job site is not ready for installation of the air handler), the air handler should be set on 4" x 4" (10 cm x 10 cm) pieces of timber on the ground in a protected area. Cover the air handler to protect it from the environment. Rapid Engineering LLC will not be held responsible for any damages that may occur from outdoor storage.

1.3 Safety Labels and Their Placement

Product safety signs or labels should be replaced by product user if they are no longer legible. Please contact Rapid Engineering LLC or your RAPID® independent distributor to obtain replacement signs or labels.

1.4 California Proposition 65

In accordance with California Proposition 65 requirements, a warning label must be placed in a highly visible location on the outside of the equipment (i.e., near equipment's serial plate). To order additional labels, please contact Rapid Engineering LLC or your RAPID® independent distributor.

SECTION 2: INSTALLER RESPONSIBILITY

⚠ WARNING

Explosion Hazard

Equipment must have access to uncontaminated air at all times.

Failure to follow these instructions can result in death, injury or property damage.

The installer is responsible for the following:

- To install and commission the air handler, as well as the gas and electrical supplies, in accordance with applicable specifications and codes. Rapid Engineering LLC recommends the installer contact a local building inspector or Fire Marshal for guidance.
- To use the information given in a layout drawing and in the manual together with the cited codes and regulations to perform the installation.
- To install the heater in accordance with the clearances to combustibles.
- To furnish all needed materials not furnished as standard equipment.
- To plan location of supports.
- To provide access to air handler for servicing.
- To provide the owner with a copy of this Installation, Operation and Service Manual.
- To never use heater as support for a ladder or other access equipment and never hang or suspend anything from heater.
- To ensure there is adequate air circulation around the air handler and to supply air for combustion, ventilation and distribution in accordance with local codes.
- To assemble or install any accessories or associated duct work using best building practices.
- To properly size supports and hanging materials.
- To ensure heater is placed in an approved application.

2.1 Wall Tag

A laminated wall tag is available for the heater as a permanent reminder of the safety instructions and the importance of the required clearances to combustibles. Please contact Rapid Engineering LLC or your RAPID® independent distributor to obtain the wall tag. Affix the tag on a wall near the heater (e.g. thermostat or control system).

A copy of the wall tag (P/N 91040118) is illustrated on the back cover. For an immediate solution, you may affix this copy on the wall near the heater.

Know your model number and installed configuration. Model number and installed configuration are found on the rating plate and in the Installation, Operation and Service Manual.

2.2 Corrosive Chemicals

⚠ CAUTION

Product Damage Hazard

Do not use equipment in area containing corrosive chemicals.

Refer to appropriate Material Safety Data Sheets (MSDS).

Failure to follow these instructions can result in product damage.

Rapid Engineering LLC cannot be responsible for ensuring that all appropriate safety measures are undertaken prior to installation; this is entirely the responsibility of the installer. It is essential that the contractor, the sub-contractor, or the owner identifies the presence of combustible materials, corrosive chemicals or halogenated hydrocarbons* anywhere in the premises.

** **Halogenated Hydrocarbons** are a family of chemical compounds characterized by the presence of halogen elements (fluorine, chlorine, bromine, etc.). These compounds are frequently used in refrigerants, cleaning agents, solvents, etc. If these compounds enter the air supply of the burner, the life span of the air handler components will be greatly reduced. The location of the outside air supply must be carefully chosen to supply outside air, free of these compounds, to the burners whenever the presence of these compounds is suspect. Warranty will be invalid if the air handler is exposed to halogenated hydrocarbons.*

2.3 National Standards and Applicable Codes

All equipment must be installed in accordance with the latest revision of the applicable standards and national codes. This refers also to the electric, gas and venting installation. Note: Additional standards for installation in public garages, aircraft hangars, etc. may be applicable.

2.4 Required Equipment

When lifting of the equipment is required, the installing contractor is responsible for supplying or arranging for the appropriate lifting equipment so that the air handler and accessories may be placed in a safe manner.

The qualified installer or service technician is responsible for having the appropriate equipment for the safe installation and start-up of a direct-fired air handler. Tools required to commission the equipment include, but are not limited to, the following:

- Various screwdriver types and sizes
- Various adjustable wrenches
- Torque wrenches
- Pipe wrenches sized appropriately for the gas train components
- Drill motor and various drills
- U-tube manometer or gas pressure gauge
- Volt meter
- Clamp style ammeter
- Belt tension gauge
- Caulk (non-silicone)

SECTION 3: CRITICAL CONSIDERATIONS

⚠WARNING

Fire Hazard

Keep all flammable objects, liquids and vapors the minimum required clearances to combustibles away from equipment.

Some objects will catch fire or explode when placed close to equipment.

Failure to follow these instructions can result in death, injury or property damage.

⚠WARNING

Explosion Hazard

Fresh air supply duct and burner housing must be purged with fresh air four times before every ignition.

Explosive vapors will ignite if not evacuated before ignition attempt.

Failure to follow these instructions can result in death, injury or property damage.

3.1 Required Clearances to Combustibles

Clearances are the required distances that combustible objects must be away from the air handler to prevent fire hazards. Combustibles are materials that may catch on fire and include common items such as wood, paper, rubber, fabric, etc. **Maintain clearances to combustibles at all times for safety.**

Check the clearances on each air handler being installed to make sure the product is suitable for your application and the clearances are maintained. Clearances to combustibles are 12" (30.5 cm) on the control enclosure side and 6" (15.2 cm) on all other surfaces. Read and follow the safety guidelines below:

- Locate the air handler so that the air intakes are not too close to any exhaust fan outlets, gasoline storage, propane tanks or other contaminants that could potentially cause dangerous situations.
- Keep gasoline or other combustible materials including flammable objects, liquids, dust or vapors away from this air handler or any other piece of equipment.
- Maintain clearances from heat sensitive material, equipment and workstations.

Clearances to combustibles do not denote clearances for accessibility. Minimum clearance for access is 48" (122 cm). Minimum clearance for accessibility applies to the control enclosure, blower access panel and filter access panel (when equipped).

The stated clearances to combustibles represent a surface temperature of 90° F (50° C) above room temperature (90° F [50° C] plus ambient temperature). Building materials with a low heat tolerance (i.e. plastics, vinyl siding, canvas, tri-ply, etc.) may be subject to degradation at lower temperatures. It is the installer's/owner's responsibility to assure that adjacent materials are protected from degradation.

• Maintain clearances from vehicles parked below the air handler. *See Page 7, Section 4.4*.

3.2 Purge of Supply Duct

If this heating unit is to be installed indoors, and its outdoor air supply ducted from outdoors, ANSI Standards Z83.4/CSA 3.7, Z83.18 and Z83.25/CSA 3.19 require that all supply duct shall be purged a minimum of four times prior to any ignition attempt. If the volume of the outdoor air supply duct exceeds the heating unit's ability to complete the required four air changes prior to ignition, you must contact the factory to purchase an extended purge card of the appropriate duration to meet this requirement.

3.3 Hardware

Unless otherwise specified, all hardware must be torqued to settings on *Page 6, Table 1*.

Note: Inlet hood opening shall not be installed with inlet opening facing into the prevailing wind direction in order to help prevent the possibility of moisture entrainment.

Table 1: Recommended Torque Settings

Bolt Head Grade Marking	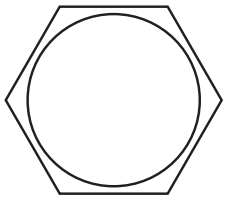	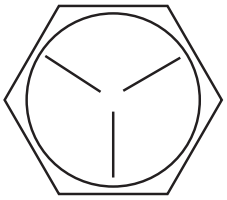
Nut Grade Marking	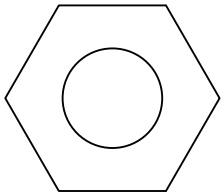	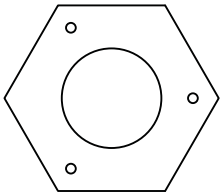
Bolt Size	**Grade 2**	**Grade 5**
10-24	27 in•lb	42 in•lb
1/4-20	65 in•lb	101 in•lb
5/16-18	11 ft•lb	17 ft•lb
3/8-16	19 ft•lb	30 ft•lb

Bolt Head Grade Marking		
Nut Grade Marking	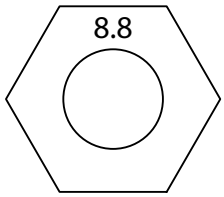	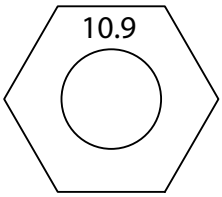
Bolt Size	**Grade 8.8**	**Grade 10.9**
M5	6Nm	9Nm
M6	10Nm	15Nm
M8	25Nm	35Nm
M10	50Nm	75Nm
M12	85Nm	130Nm
M16	215Nm	315Nm

SECTION 4: NATIONAL STANDARDS AND APPLICABLE CODES

4.1 Gas Codes

The type of gas appearing on the nameplate must be the type of gas used. Installation must comply with national and local codes and requirements of the local gas company.

United States: Refer to NFPA 54/ANSI Z223.1 - latest revision, National Fuel Gas Code.

Canada: Refer to CSA B149.1- latest revision, Natural Gas and Propane Installation Code.

4.2 Installation Codes

Installations must be made in accordance with the Standard for the Installation of Air-Conditioning and Ventilating Systems, NFPA 90A - latest revision for the installation of air conditioning and ventilating systems.

4.3 Aircraft Hangars

Installation in aircraft hangars must be in accordance with the following codes:

United States: Refer to Standard on Aircraft Hangars, NFPA 409 - latest revision.

Canada: Refer to Natural Gas and Propane Installation Code, Standard CSA B149.1 - latest revision.

4.4 Parking Structures and Repair Garages

Installation in garages must be in accordance with the following codes:

United States: Refer to Standard for Parking Structures, NFPA 88A - latest revision or the Code for Motor Fuel Dispensing Facilities and Repair Garages, NFPA 30A - latest revision.

Canada: Refer to Natural Gas and Propane Installation Code, Standard CSA B149.1 - latest revision.

4.5 Electrical

Electrical connection to air handler must be in accordance with the following codes:

United States: Refer to National Electrical Code®, NFPA 70 - latest revision. Wiring must conform to the most current National Electrical Code®, local ordinances, and any special diagrams furnished.

Canada: Refer to Canadian Electrical Code, CSA C22.1 Part 1 - latest revision.

4.6 Venting

The venting must be installed in accordance with the requirements within this manual and the following codes:

United States: Refer to NFPA 54/ANSI Z223.1- latest revision, National Fuel Gas Code.

Canada: Refer to CSA B149.1 - latest revision, Natural Gas and Propane Installation Code.

4.7 High Altitude

These air handlers are approved for installations up to 2000' (609.6 m) (in the US) and 4500' (1371.6 m) (in Canada) without modification. Consult factory if US installation is above 2000' (609.6 m) or Canadian installation is above 4500' (1371.6 m).

SECTION 5: SPECIFICATIONS

Estimated weight table apply to both upright and horizontal units of the same model. *See Page 8, Table 2*.

Unless otherwise requested, all direct-fired air handlers are set-up to accept an external static pressure (ESP) of 1 in wc (2.5 mbar). The external static pressure is the sum of all accessories and any attached ductwork. *See Page 9, Table 4 and Table 5* for static pressure accessories. If more external static pressure is required, this needs to be requested with the order as required motor horsepower (HP) may increase from the specifications given *on Page 8, Table 3*.

Table 2: Estimated Shipping Weights

Model	2005		2010		2010B		2020		2030	
	lbs	kg	lbs	kg	lbs	kg	lbs	kg	lbs	kg
Air Handler*	589	267	994	451	1290	585	1946	883	2877	1305
Filter Section**	118	54	210	95	282	128	407	185	439	199
Filtered Mix Box**	301	137	443	201	539	245	800	363	1156	524
Inlet Hoods	145	66	276	125	346	157	499	226	539	244
Upright Legs***	75	34	99	45	137	62	176	80	214	97
Horizontal Legs***	102	46	102	46	102	46	102	46	102	46
Moisture Limiters****	N/A	N/A	120	54	120	54	210	95	260	118
Skid	147	67	249	113	324	146	486	220	719	326

* Includes Casing, Motor, Control Panel and Manifold

** Includes Weight of Filters

*** Total Quantity of 4 legs

**** Mounted to Intake Hood

Table 3: Performance

Airflow CFM (m^3/h)	Model	Motor HP at 1" ESP	dBA at Noted External Static Pressure (in wc)**			Heat Output at Maximum Temperature Rise (Btu/h) x 1000		Minimum Inlet Gas Pressure in wc (mbar) with manifold sizes				
			0	0.5	1	NG	LPG	.75 NPT-19 (mm)	1.0 NPT-25 (mm)	1.25 NPT-32 (mm)	1.5 NPT-38 (mm)	2.0 NPT-51 (mm)
1,000 (1,700)	2005	1	48	72	72	119	97	9.6 (23.9)				
2,000 (3,400)	2005	2	78	80	81	238	194	6.7 (16.7)				
3,000 (5,100)	2005	2	61	68	72	356	292	5.7 (14.2)				
4,000 (6,800)	2005	3	66	69	73	475	389	8.3 (20.6)				
5,000 (8,500)	2005	5	72	72	75	594	486	8.5 (21.2)				
5,000 (8,500)	2010	3	64	75	80	594	486		6.3 (15.7)	6.3 (15.7)		
6,000 (10,200)	2010	5	62	73	80	713	583		6.4 (15.9)	5.8 (14.4)		
7,000 (11,900)	2010	5	60	71	78	832	680		8.3 (20.6)	6.5 (16.1)		
8,000 (13,600)	2010	5	61	72	78	950	778		10.6 (26.4)	7.7 (19.1)		
9,000 (15,300)	2010	7.5	65	73	79	1,069	875		13.2 (32.8)	9.2 (22.8)		
10,000 (17,000)	2010	7.5	66	74	79	1,188	972		16.1 (40.1)	10.9 (27.1)		
11,000 (18,700)	2010B	7.5	67	69	73	1,307	1,069			8.2 (20.5)	6.0 (14.9)	
12,000 (20,400)	2010B	7.5	69	71	71	1,426	1,166			9.5 (23.8)	6.0 (14.9)	
13,000 (22,100)	2010B	10	71	73	74	1,544	1,264			11 (27.5)	7.9 (19.6)	
14,000 (23,800)	2010B	10	72	75	76	1,663	1,361			12.7 (31.6)	8.9 (22.1)	
16,000 (27,200)	2010B	15	76	78	79	1,901	1,555			16.4 (41.0)	11.1 (27.7)	
18,000 (30,600)	2010B	15	79	80	81	2,138	1,750			20.9 (52.0)	13.7 (34.1)	
16,000 (27,200)	2020	10	65	72	73	1,901	1,555				8.7 (21.6)	6.1 (15.1)
18,000 (30,600)	2020	15	67	72	77	2,138	1,750				9.7 (24.2)	6.0 (14.9)
20,000 (34,000)	2020	15	70	73	77	2,376	1,944				11.7 (29.0)	6.8 (16.8)
22,500 (38,200)	2020	20	73	74	78	2,673	2,187				14.4 (35.9)	8.0 (19.8)
25,000 (42,500)	2020	25	76	76	79	2,970	2,430				17.5 (43.5)	9.4 (23.4)
27,500 (46,700)	2020	30	78	79	80	3,267	2,673				20.9 (51.9)	11.1 (27.7)
30,000 (51,000)	2020	40	80	81	84	3,564	2,916				24.6 (61.2)	13.0 (32.3)
27,500 (46,700)	2030	25	82	83	85	3,267	2,673					9.0 (22.4)
30,000 (51,000)	2030	25	84	85	86	3,564	2,916					10.5 (26.1)
32,500 (55,200)	2030	30	86	87	88	3,861	3,159					12.2 (30.4)
35,000 (59,500)	2030	40	88	88	89	4,158	3,402					14.1 (35.1)
37,500 (63,700)	2030	40	90	90	90	4,455	3,645					13.4 (33.3)
40,000 (68,000)	2030	50	91	91	92	4,752	3,888					13.8 (34.3)

All information provided in this table is based on the assumption that unit is installed at an altitude below 2000 feet (609.6 meters).

CF = Consult Factroy

** dBA is measured at 10' (3 m) from unducted discharge.

*** Maximum Inlet Gas Pressure:

All Models = 5 psi (344.7 mbar)

Table 4: Estimated Pressure Drop of Accessory Components

Model	Airflow Range		Inlet Hood with Filters		Filter Section		Inlet Hood with Moisture Limiters		Inlet Hood with Bird Screen	
	in wc	(mbar)	in wc	(mbar)	in wc	(mbar)	in wc	(mbar)	in wc	(mbar)
2005	1,000-2,000	(1,700-3,400)	0.25	0.62	0.25	0.62	-	-	0.05	0.12
	3,000-4,000	(5,100-6,800)	0.40	1.0	0.50	1.25	-	-	0.05	0.12
2010	5,000-6,000	(8,495-10,200)	0.25	0.62	0.25	0.62	0.10	0.25	0.05	0.12
	7,000-10,000	(11,400-17,000)	0.40	1.0	0.50	1.25	0.10	0.25	0.05	0.12
2010B	11,000-14,000	(18,700-23,800)	0.40	1.0	0.50	1.25	0.10	0.25	0.05	0.12
2020	16,000-17,000	(27,200-28,883)	0.25	0.62	0.25	0.62	0.10	0.25	0.05	0.12
	18,000-25,000	(30,600-42,500)	0.40	1.0	0.50	1.25	0.10	0.25	0.05	0.12
2030	27,500-30,000	(46,772-51,000)	0.35	0.87	0.75	1.87	0.10	0.25	0.05	0.12
	32,500-40,000	(55,200-68,000)	0.40	1.0	0.85	2.12	0.10	0.25	0.05	0.12

Table 5: Estimated Pressure Drop of Accessory Components (continued)

Model	Airflow Range		Discharge Heads		Splash Plate		Inlet/Discharge Damper	
	in wc	(mbar)	in wc	(mbar)	in wc	(mbar)	in wc	(mbar)
2005	1,000-2,000	(1,700-3,400)	0.10	0.25	0.05	0.12	0.10	0.25
	3,000-4,000	(5,100-6,800)	0.10	0.25	0.05	0.12	0.10	0.25
2010	5,000-6,000	(8,495-10,200)	0.10	0.25	0.05	0.12	0.10	0.25
	7,000-10,000	(11,400-17,000)	0.10	0.25	0.05	0.12	0.10	0.25
2010B	11,000-14,000	(18,700-23,800)	0.10	0.25	0.05	0.12	0.10	0.25
2020	16,000-17,000	(27,200-28,883)	0.10	0.25	0.05	0.12	0.10	0.25
	18,000-25,000	(30,600-42,500)	0.10	0.25	0.05	0.12	0.10	0.25
2030	27,500-30,000	(46,772-51,000)	0.10	0.25	0.05	0.12	0.10	0.25
	32,500-40,000	(55,200-68,000)	0.10	0.25	0.05	0.12	0.10	0.25

SECTION 6: LIFTING AN AIR HANDLER

⚠ WARNING

Crush Hazard

Use proper lifting equipment and practices.

Failure to follow these instructions can result in death, injury or property damage.

The air handler must be installed in compliance with all applicable codes. The qualified installer or service technician must use best building practices when installing the air handler and any optional equipment. This piece of equipment requires at least 4 CFM (6.8 m^3/h) of outside air per 1,000 Btu/h (0.293 kW). Any air handler that recirculates air from the heated space must use the return air opening to prevent any return air from passing over the burner.

Before installation, check that the local distribution condition, nature of gas and gas pressure, and the current state of adjustment of the equipment are compatible. If filters are not installed (via inlet hood or filter section), an air strainer (provided by others) must be installed on the inlet of the air handler with openings less than or equal to 5/8" (16 mm) in diameter. Air inlets must be installed in such a manner that their lowest edge is 19" (500 mm) above any surface. This applies to roof curbs, upright stands and suspended air handlers.

6.1 Lifting an Air Handler

6.1.1 Preparing to Lift the Air Handler

Prior to lifting the air handler, the following steps must be performed:

1. Remove all packaging or banding that attached the air handler to the skid and ensure that the air handler is no longer bound to the skid.
2. Remove all of the accessories or packages that were shipped on the same skid, inside the air handler or inside the control enclosure.
3. Inspect the air handler to:
   - Verify that there is no damage as a result of shipping.
   - Ensure that it is appropriately rated for the utilities available at the installation site.
   - Verify that the lifting lugs are intact undamaged and secured to the air handler.
   - Ensure factory-installed hardware is torqued as specified.
4. Prepare the installation location to be ready to accept the air handler (i.e. roof curb, mounting stand or legs).
5. Verify the lifting equipment can handle the air handlers weight and the required reach. *See Page 8, Table 2*.

6.1.2 Lifting a Horizontal Air Handler (All Models)

Lift the air handler into place installing appropriate hardware (supplied by others) into all lifting lug holes on the unit base. For model 2005, lifting lug holes are 1.5" (3.81 cm) diameter. For models 2010 - 2030, lifting lug holes are 2.0" (5.1 cm) diameter. Use spreader bars to ensure that the lifting cables clear the sides of the air handler. The air handler must be kept level during the lift to prevent tipping, twisting or falling. If lifted improperly, product damage may occur.

Next, refer to the applicable portions of *Section 7*, *See Pages 12 - 14* for specific mounting instructions. For mounting of accessories, refer to the applicable portions of *Page 21, Section 10.1 through Page 32, Section 13*.

FIGURE 1: Lifting a Horizontal Air Handler

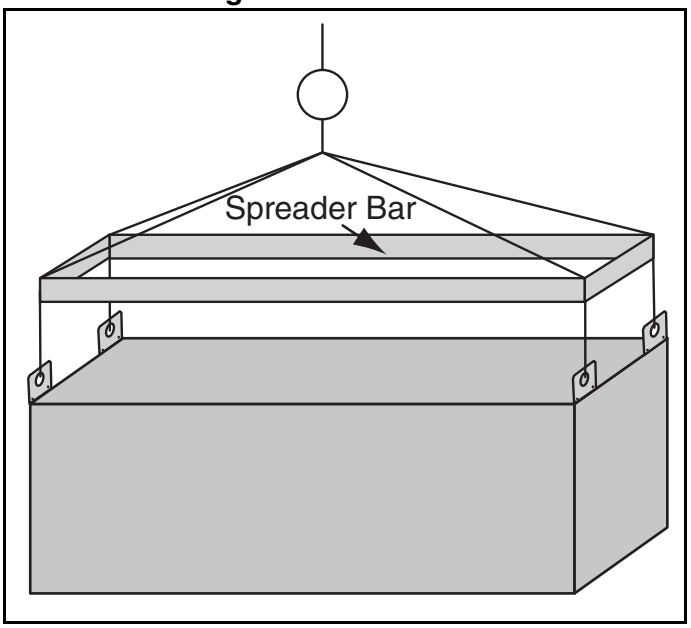

6.1.3 Lifting an Upright Air Handler

All air handlers are shipped in the horizontal position.

Prior to lifting an upright air handler, the following steps must be performed (*See Page 11, Figure 2*):

Step 1: The air handler must be lifted using the two lifting lugs on the top of the discharge end and the two lifting lugs on the inlet end, using a spreader bar across the long axis. Lift the air handler off the skid and place it on a flat, clean, dry surface.

Step 2: Remove the lifting lugs on the inlet end of the air handler and re-install hardware.

Step 3: Use all four lifting lugs on the discharge end of the air handler to enable the air handler to be lifted into the upright position.

Step 4: Lift the air handler into upright position.

Step 5: Next, refer to the applicable portions of *Page 16, Section 9* for specific mounting instructions.

FIGURE 2: Lifting an Upright Air Handler

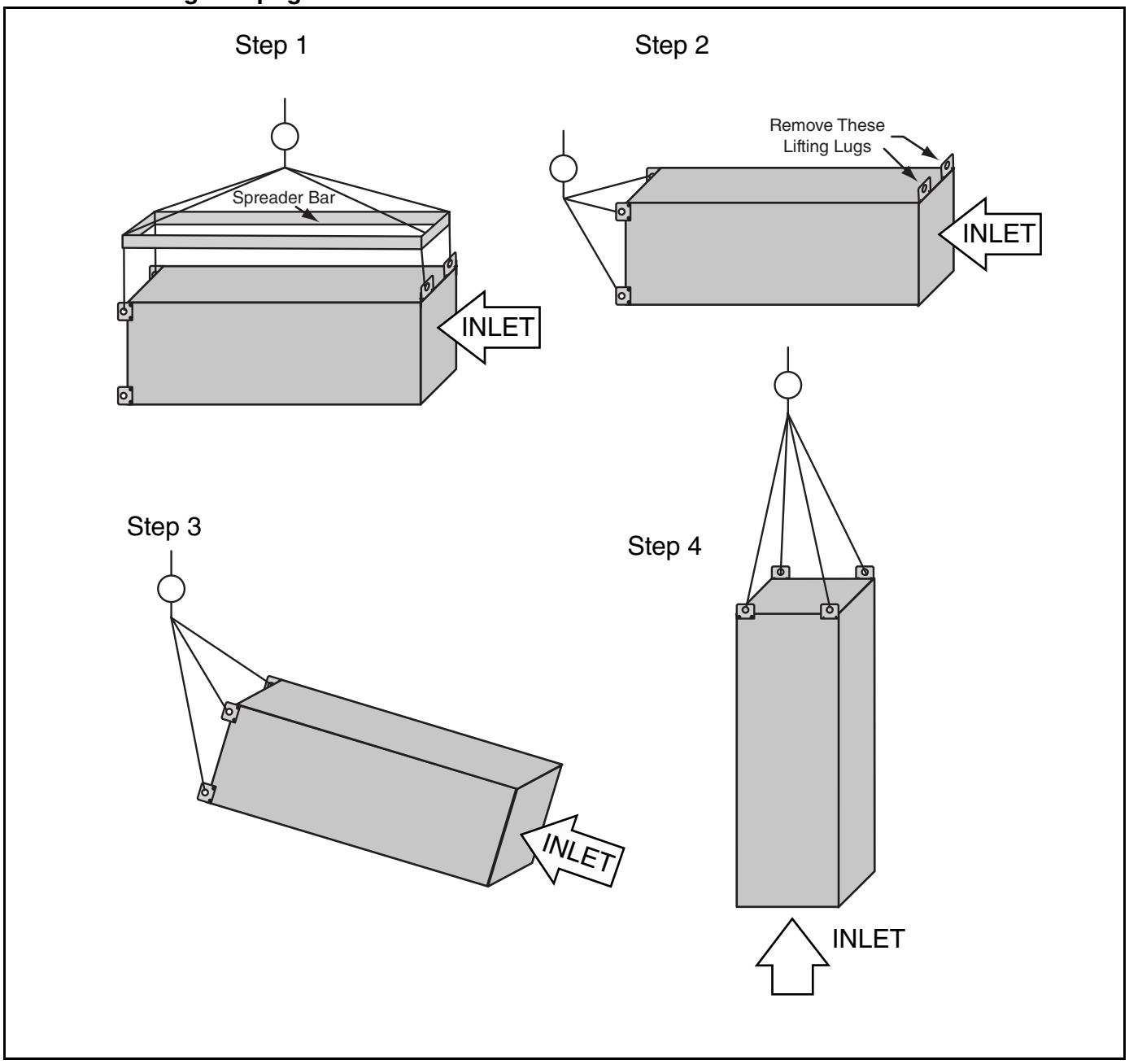

SECTION 7: ROOF CURB

⚠ WARNING			
Crush Hazard **Use proper lifting equipment and practices.**	**Falling Hazard** **Use proper safety equipment and practices to avoid falling.**	**Severe Injury Hazard** **Use proper lifting practices and equipment.** **Equipment and accessories are heavy.**	**Cut/Pinch Hazard** **Wear protective gear during installation, operation and service.** **Edges are sharp.**
Failure to follow these instructions can result in death, injury or property damage.			

Roof curbs are shipped unassembled and require field assembly.
NOTE: Before installation, verify that you have the correct roof curb and that all required components are present. If any are missing, contact your RAPID® independent distributor.

7.1 Roof Curb Assembly and Installation

Assemble roof curb according to the assembly drawing, on *Page 13*, *Figure 3*. Supplied hardware must be torqued to recommended specifications on *Page 6, Table 1*.
Place the curb on the roof in the position in which it will be installed. Check that the diagonal measurements are within 1/8" (3 mm) of each other. To ensure a weatherproof seal between the air handler and the curb, the curb must be level with no twist from end to end. Shim level as required and secure curb to roof deck using best building practices. The curb is self-flashing. Install roofing material as required.

NOTE: Check the installation location to ensure proper clearances to combustibles and clearance for access. *See Page 5, Section 3.1*.

FIGURE 3: Roof Curb Assembly

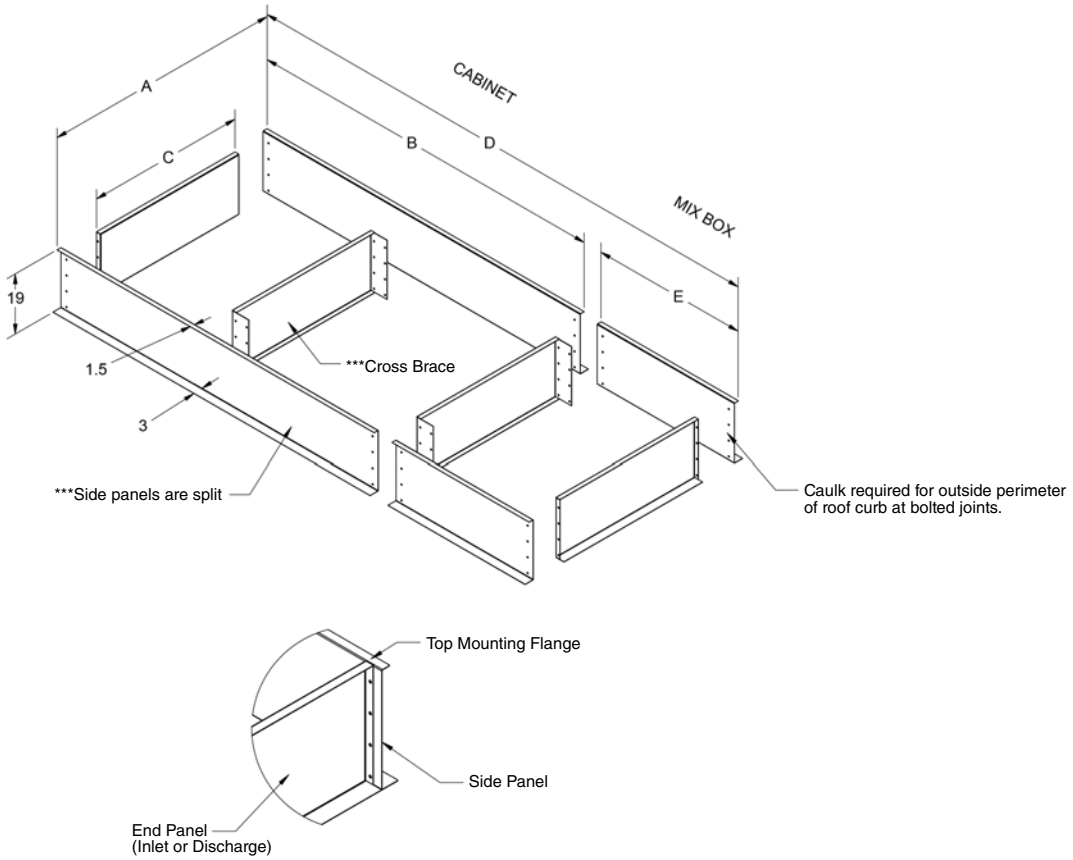

Model		Dimensions					Weight*		Weight**	
		A	B	C	D	E	lbs	kg	lbs	kg
2005	(in)	25.9	78.2	22.9	127.1	48.9	96	43	140	63
	(cm)	65.8	198.6	58.2	322.8	121.8				
2010	(in)	39.3	102.5	36.3	155.5	51.4	133	60	179	81
	(cm)	99.8	260.3	96.8	395.1	128.1				
2010B	(in)	45.1	96.3	42.1	143.2	47.9	130	59	173	78
	(cm)	114.6	244.6	111.6	363.8	119.2				
2020	(in)	51.9	114.7	48.9	182.7	68.0	153	69	216	97
	(cm)	131.8	291.3	128.8	464.1	172.7				
2030	(in)	76.1	151.8	73.1	215.4	64.6	210	94	268	121
	(cm)	193.3	385.6	190.3	547.1	161.5				

NOTE:

*Blower and Burner Section

**Blower, Burner and Mixbox

*** Split sides and Cross Brace for Model 2030

- Curb is shipped unassembled.
- A and B are outside dimensions for the top of the curb.
- Curb material is 14 gauge galvanized steel.
- Nuts and bolts (3/8" x 1") are furnished.
- Caulk all joints before assembling. (Caulk provided by others)

7.2 Air Handler Mounting to Roof Curb

After the curb has been installed, the air handler may be placed on the curb. *See Page 14, Figure 4*. After the air handler is in place, the installer must fasten the air handler to the curb. This is accomplished by drilling holes down through the floor of the air handler and into the curb. At least three #12 sheet metal screws (supplied by others) equally spaced on each side must be used to attach the air handler to the curb. After the curb has been installed, the air handler may be placed on the curb. There must be a 1/8" (.3 cm) x 2" (5.1 cm) neoprene closed cell, adhesive-back gasket (supplied by others) between the top of the curb and the base surface of the air handler to prevent moisture from leaking into the building from either driving rains or melting snow. The installer is responsible for tying the air handler to the curb per all applicable codes.

FIGURE 4: Curb Mounting

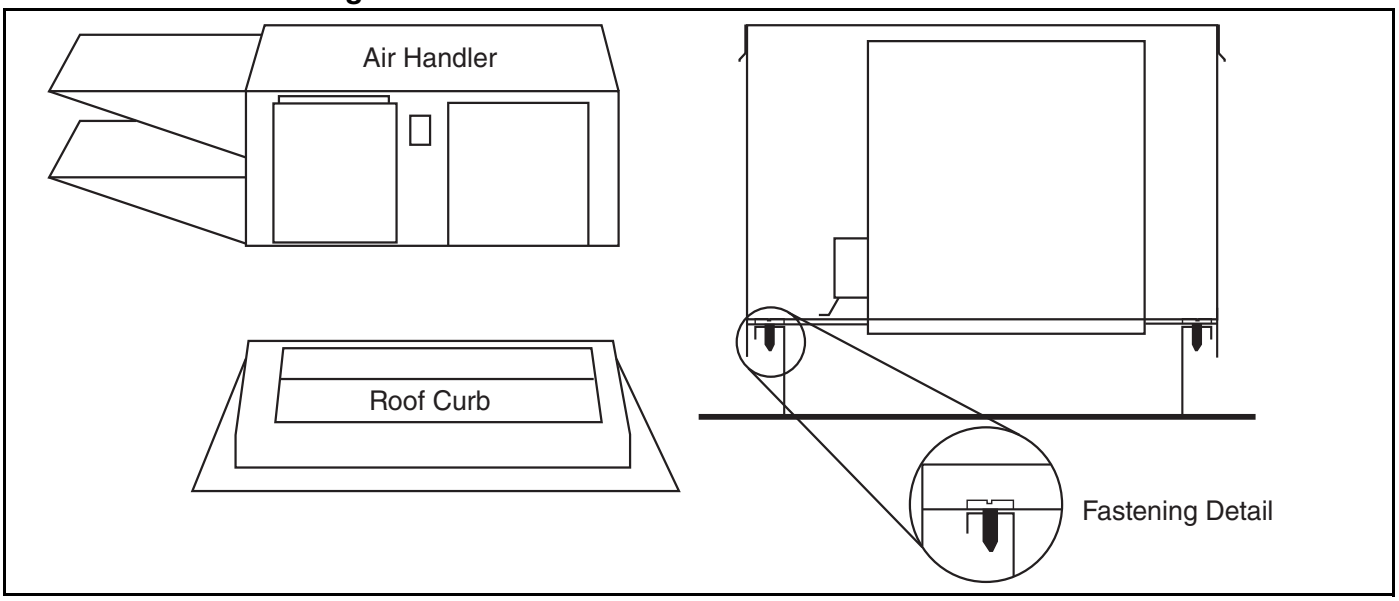

SECTION 8: LEGS FOR HORIZONTAL MOUNTING

⚠ WARNING			
Crush Hazard **Use proper lifting equipment and practices.**	**Falling Hazard** **Use proper safety equipment and practices to avoid falling.**	**Severe Injury Hazard** **Use proper lifting practices and equipment.** **Equipment and accessories are heavy.**	**Cut/Pinch Hazard** **Wear protective gear during installation, operation and service.** **Edges are sharp.**
Failure to follow these instructions can result in death, injury or property damage.			

8.1 Leg Mounting

Legs can be used when mounting an air handler on a concrete slab or directly on the floor. Legs are available for all models in the horizontal configuration.

8.2 Leg Mounting - Horizontal Air Handler

The 46" (116.8 cm) legs must first be mounted to the air handler before being mounted to the concrete slab or floor. To attach the legs with the air handler must first be lifted with the provided lifting lugs. *See Page 10, Section 6.1* for safe lifting practices. In each corner of the bottom of the air handler, four leg-mounting holes will be found.

The legs can now be mounted one at a time to the inside of the corner by removing the hardware that occupies each of the bolt locations. Place the leg on the inside of the corner and attach with the previously removed hardware. Missing hardware needs to be added at each bolt location. The required hardware is a 5/16"-18 x 1" grade 5 bolt, a 5/16" flat washer, and a 5/16"-18 grade 5 flange nut.

To attach the legs to a concrete slab, the base of each leg is equipped with two 1" holes. Studs capable of accepting 5/8" nuts must be installed in the concrete slab.

The air handler may now be placed down over the slab studs. The legs should then be bolted down with 5/8" nuts.

SECTION 9: UPRIGHT INSTALLATION

⚠ WARNING			
Crush Hazard	**Falling Hazard**	**Severe Injury Hazard**	**Cut/Pinch Hazard**
Use proper lifting equipment and practices.	**Use proper safety equipment and practices to avoid falling.**	**Use proper lifting practices and equipment.** **Equipment and accessories are heavy.**	**Wear protective gear during installation, operation and service.** **Edges are sharp.**
Failure to follow these instructions can result in death, injury or property damage.			

9.1 Upright Leg Assembly

It is recommended that two individuals are used for the assembly process.

9.2 Upright Installation

To attach the legs to a concrete slab, it must be secured with the use of studs, embedded in the concrete. Four 5/8" studs (minimum) must be installed in the slab, one for each corner of the stand. The stand has four 3/4" (19.0 mm) holes drilled through the stand pads. Fasten the stand to the slab with four 5/8" hex nuts and lock washers (provided by others).

9.3 Attaching Air Handler

Once the stand is secured to a concrete slab, the air handler may be placed on the stand. Prior to lifting the air handler, apply the foam tape and remove the attaching hardware as described below. The ½" (12.7 mm) thick double-sided urethane foam tape (provided by others) must be applied to the top edge of the stand. Remove the lifting lugs and re-install the hardware. *See Page 21, Figure 10*. Lift the air handler on to the legs. *See Page 10, Section 6.1* for safe lifting practices. Once the air handler is placed on the legs, secure it with the provided attaching hardware recommended torque settings. After placing the air handler on the legs, seams between the mounting legs and the air handler must be properly caulked (caulk provided by others).

NOTE: If using a filter section with an upright air handler and legs, the filter section must be set into the legs before the air handler is mounted on the legs. The 1/2" (12.7 cm) thick double-sided urethane foam tape should be applied between the legs and the filter section. *See Page 22, Section 10.3*.

Step 1: Assemble using the provided hardware: 3/8" bolts, nuts and lock washers. Assemble the legs with the top upside down on a flat surface. *See Page 17, Figure 5.*

FIGURE 5: Step 1

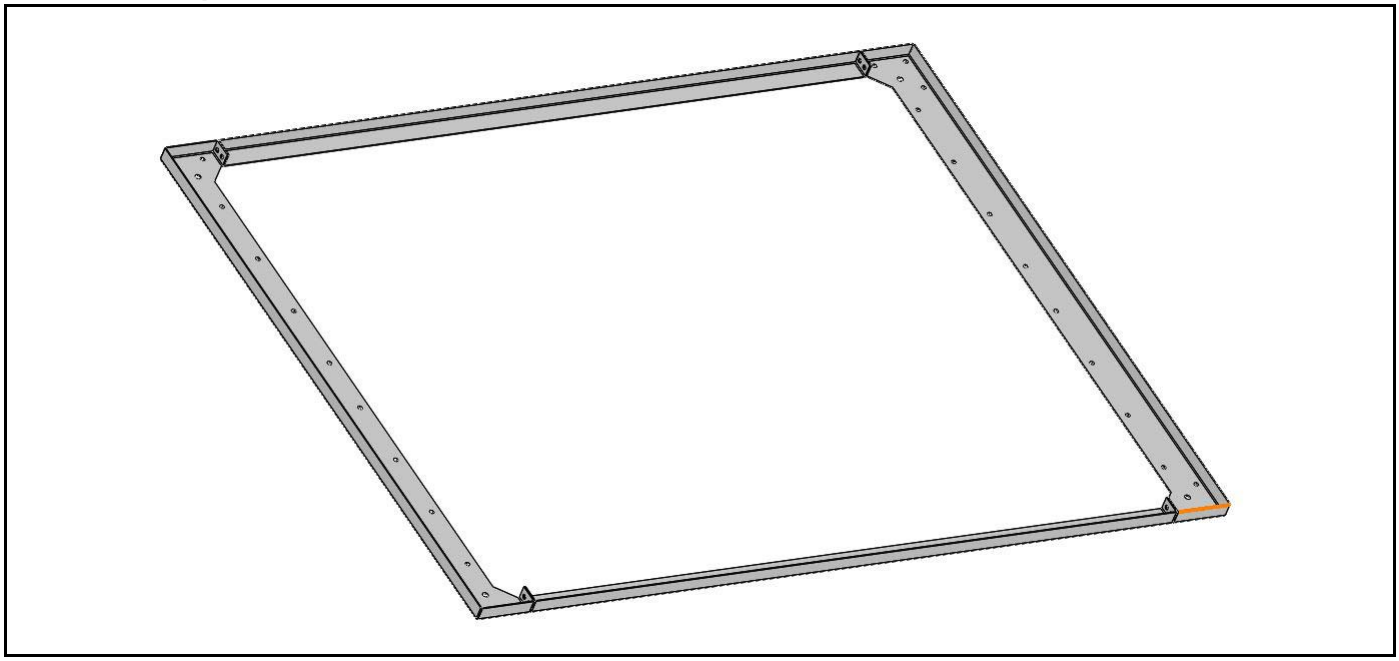

Step 2: Attach the mounting feet to each leg using supplied hardware. *See Page 17, Figure 6*.

FIGURE 6: Step 2

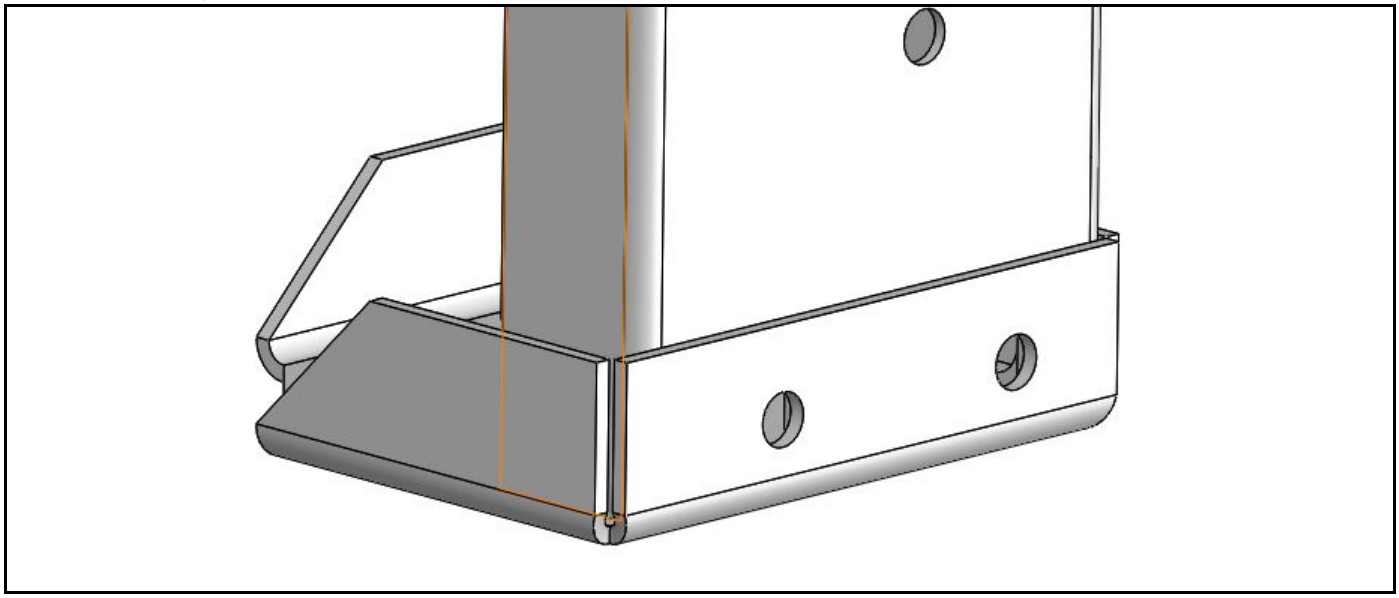

Step 3: With the top frame upside down, insert and attach the first two legs.
Note: All legs are identical and not all the holes will be used on each leg. *See Page 18, Figure 7*.

FIGURE 7: Step 3

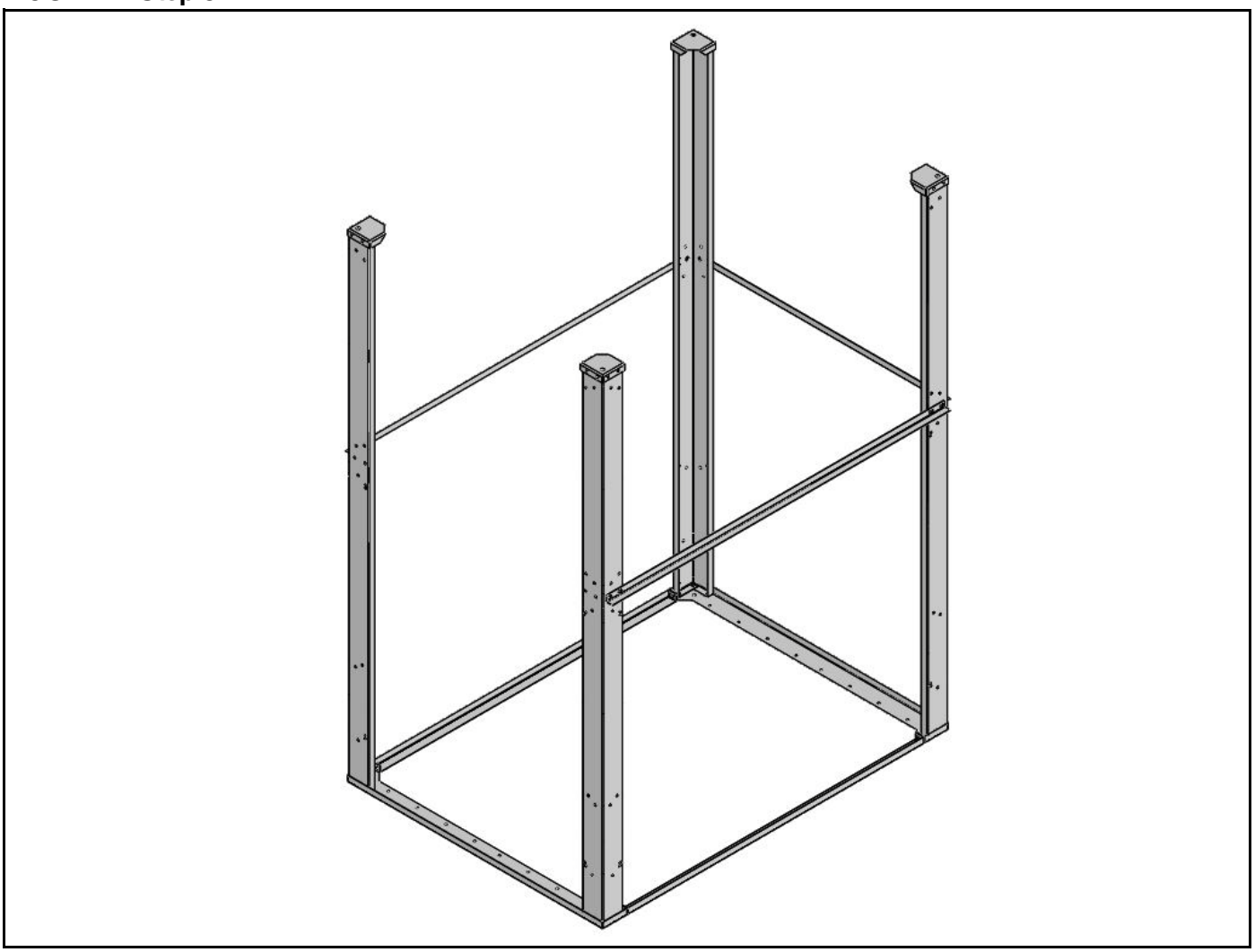

Step 4: Next attach the horizontal support(s), and repeat process for the other two remaining legs. *See Page 19, Figure 8*.

FIGURE 8: Step 4

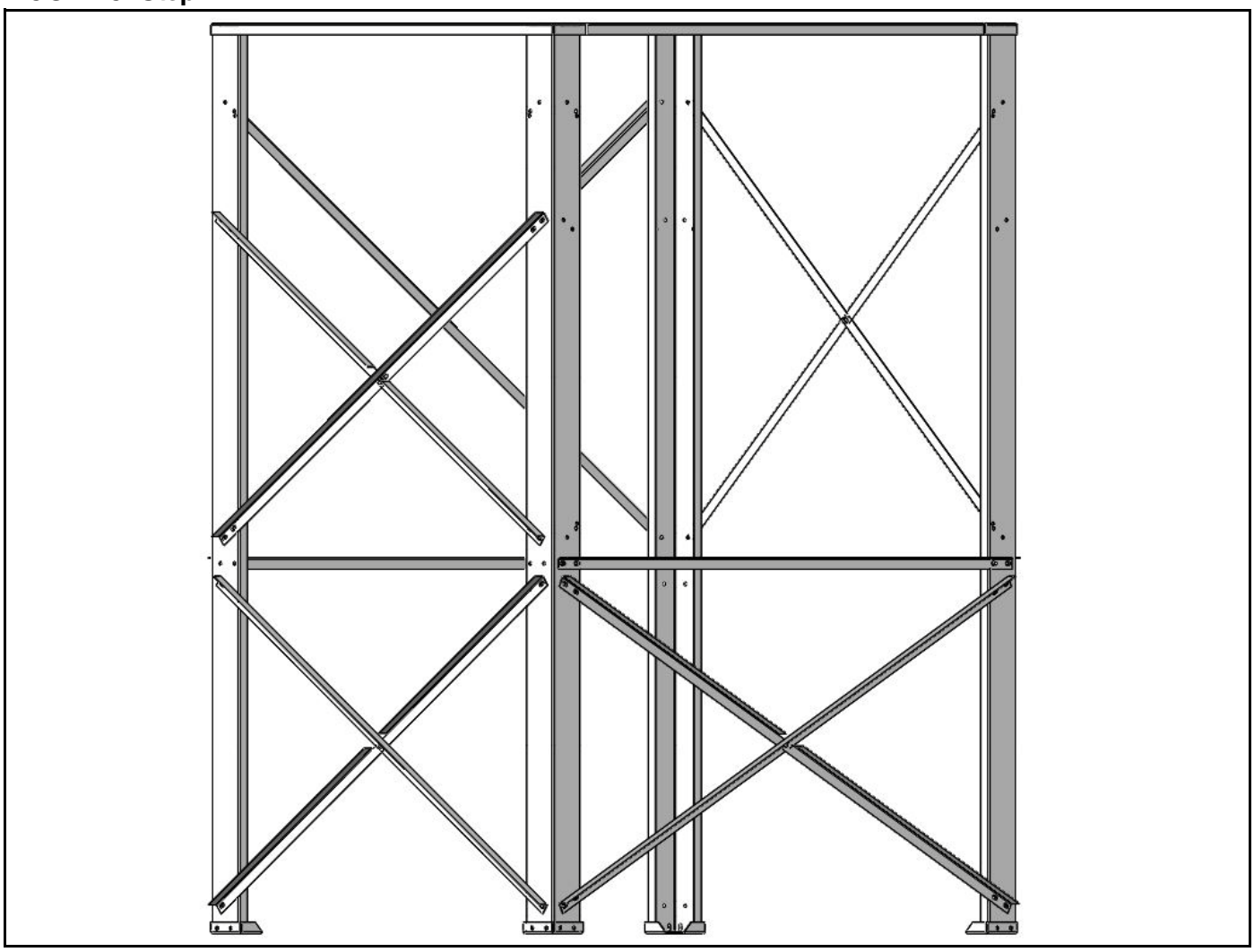

Step 5: Attach remaining support braces taking note of the support location to proper orient for your air handler's configuration. *See Page 20, Figure 9*.

FIGURE 9: Step 5

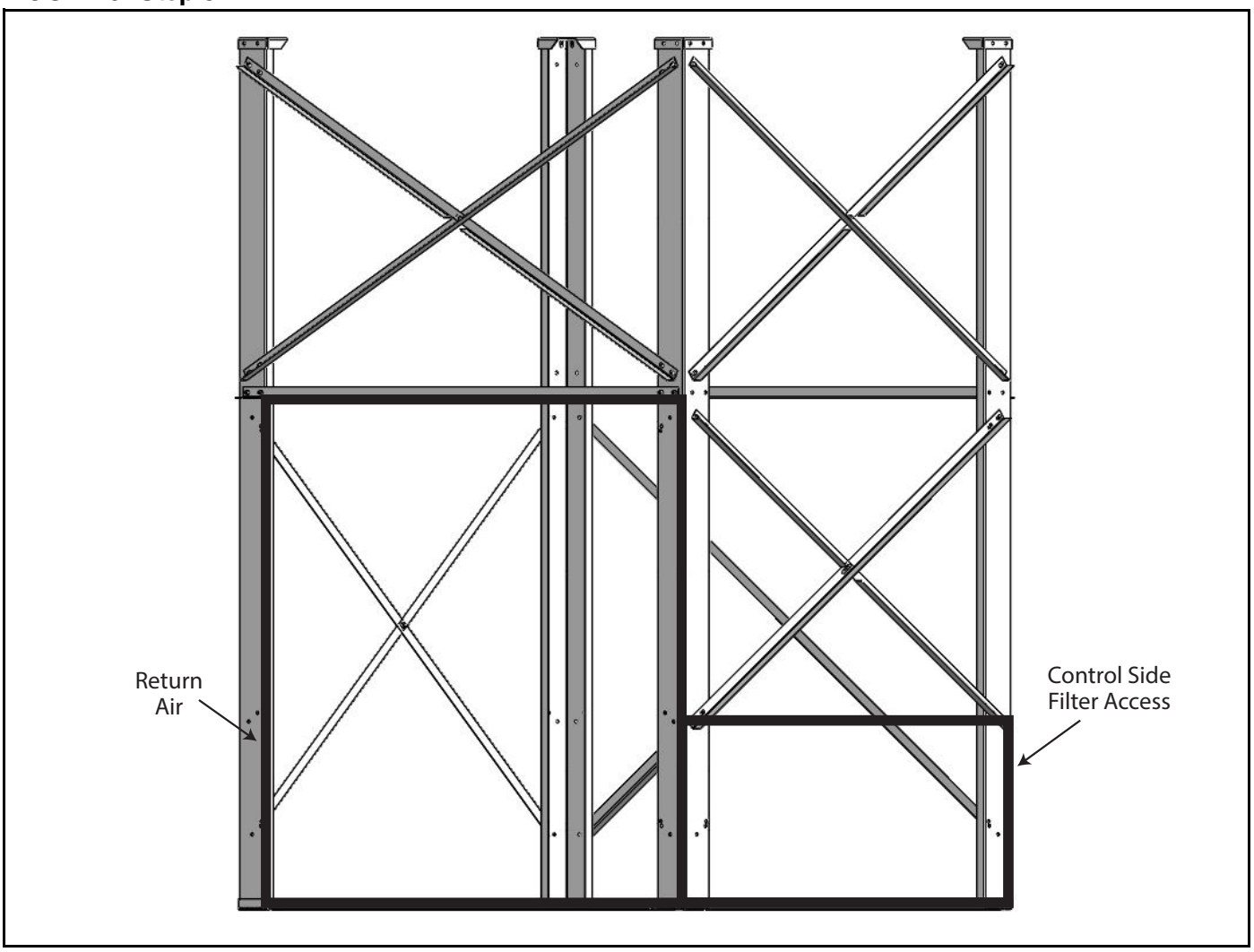

SECTION 10: FILTER SECTION

⚠ WARNING			
Crush Hazard	**Falling Hazard**	**Severe Injury Hazard**	**Cut/Pinch Hazard**
Use proper lifting equipment and practices.	**Use proper safety equipment and practices to avoid falling.**	**Use proper lifting practices and equipment.** **Equipment and accessories are heavy.**	**Wear protective gear during installation, operation and service.** **Edges are sharp.**
Failure to follow these instructions can result in death, injury or property damage.			

10.1 Filter Section Support Assembly Installation (2010 - 2030)

It is best to assemble the support base and support arms to the filter section prior to attaching the filter section to the air handler but can also be assembled to a previously installed filter section. Attach the support legs to the bottom of the filter section (air entering edge) using the hardware supplied. Refer to *Page 21, Figure 10*.

FIGURE 10: Filter Section Support Assembly

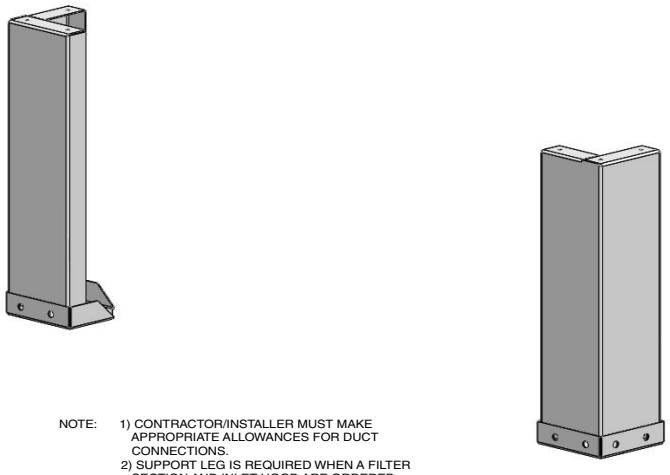

NOTE:
1) CONTRACTOR/INSTALLER MUST MAKE APPROPRIATE ALLOWANCES FOR DUCT CONNECTIONS.
2) SUPPORT LEG IS REQUIRED WHEN A FILTER SECTION AND INLET HOOD ARE ORDERED.
3) SUPPORT LEG IS PROVIDED FOR USE WITH STANDARD 19" (50 cm) ROOF CURB. SUPPORT LEG FOR USE WITH STANDARD 46" (116.8 cm) LEGS PROVIDED BY OTHERS.

10.2 Filter Section Installation - Horizontal Air Handlers

10.2.1 Filter Section Installation

For installation directly onto the inlet of the air handler, foam tape (provided by others) must be applied to the filter section sides and bottom. Attach the sides of the filter section to the factory installed riv-nuts on the inlet of the air handler with the supplied hardware. Additional TEK screws may be used along the top and flange of the filter section to seal the bottom seam. Caulk (provided by others) all seams between the filter section and air handler.

FIGURE 11: Filter Section Installation on Horizontal Air Handler

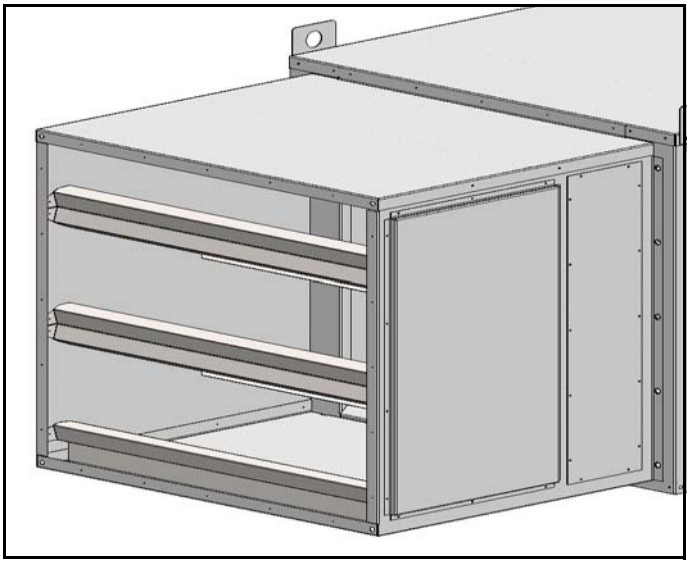

10.3 Filter Section Installation - Upright Air Handlers

10.3.1 Filter Section Installation

To install a filter section on an upright air handler that is mounted on legs, the filter section must be installed in the leg assembly prior to placing the air handler (*See Page 16, Section 9* for proper leg mounting). Place the filter section so that the outward flange is on the top side. Set the filter section into the leg assembly. Place ½" foam tape (supplied by others) along the perimeter of the top of the flange. Place the air handler on the leg assembly per the mounting instructions.

10.3.2 Filter Installation

Install the proper filters as required for the air handler's configuration. *See Page 22, Table 6*.

Table 6: Filter Quantities

Permanent Aluminum Mesh Pleated / Polyester*			
Model		**Size**	**Quantity**
2005	(in) (cm)	25 x 25 x 2 (63.5 x 63.5 x 5.1)	2
2010	(in) (cm)	20 x 20 x 2 (50.8 x 50.8 x 5.1)	6
2010B	(in) (cm)	24 x 20 + 20 x 20 [5 each] (60.9 x 50.8 + 50.8 x 50.8)	10
2020	(in) (cm)	25 x 25 x 2 (63.5 x 63.25 x 5.1)	12
2030	(in) (cm)	24 x 20 (60.9 x 50.8)	24

SECTION 11: INLET HOOD

⚠ WARNING			
Crush Hazard	**Falling Hazard**	**Severe Injury Hazard**	**Cut/Pinch Hazard**
Use proper lifting equipment and practices.	**Use proper safety equipment and practices to avoid falling.**	**Use proper lifting practices and equipment.** **Equipment and accessories are heavy.**	**Wear protective gear during installation, operation and service.** **Edges are sharp.**
Failure to follow these instructions can result in death, injury or property damage.			

Inlet hoods are shipped unassembled and must be assembled prior to installation. The inlet hood may be installed either onto the inlet of the air handler or to an outside wall. After installing an inlet hood, all hardware must be torqued according to recommended specifications on *Page 6, Table 1*. In addition, all seams must be caulked (provided by others).

NOTE: Check to be sure that all required components are present. If any are missing, contact your RAPID® independent distributor.

11.1 Inlet Hood Assembly

FIGURE 12: Inlet Hood with Filter Racks

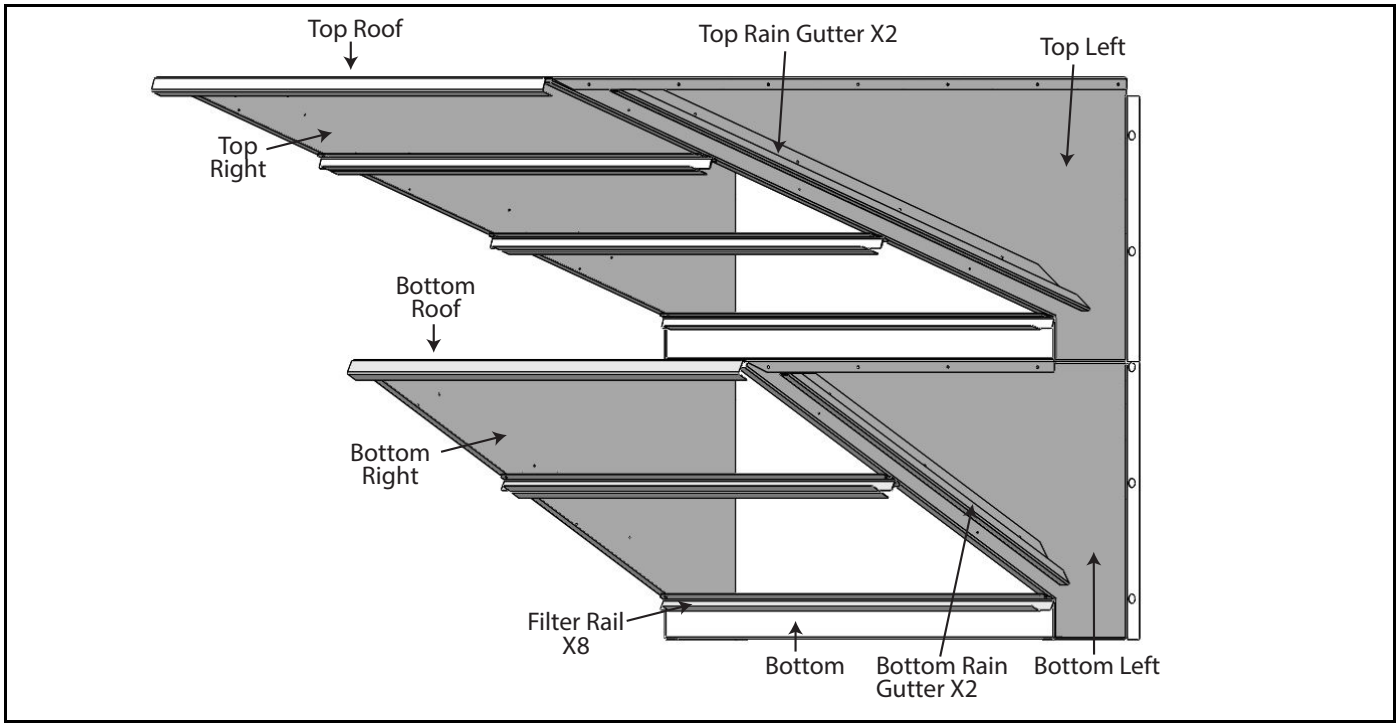

FIGURE 13: Inlet Hood

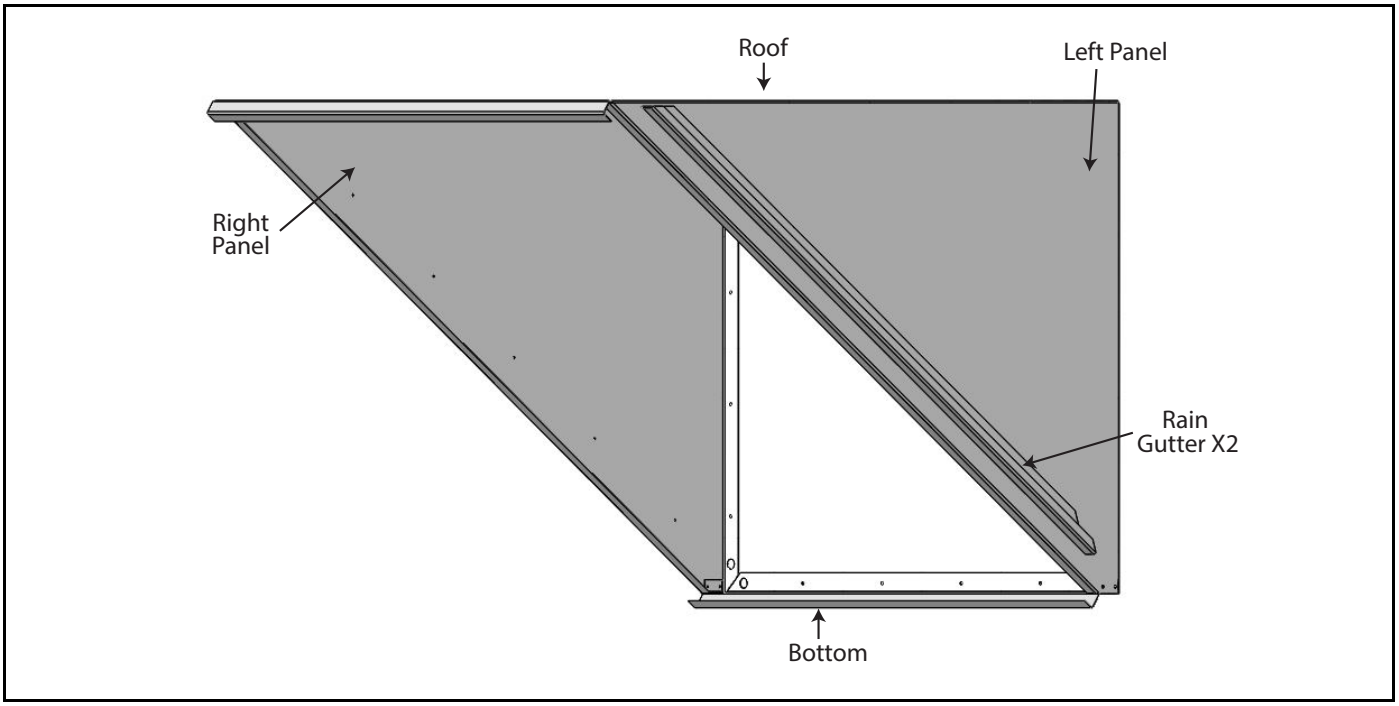

For an air handler supplied with a filter section a single hood is provided. For an air handler with inlet hood mounted filters, two hoods are provided. To install inlet hood on an exterior wall, drill holes 8" (20.3 cm) in the flanges of the inlet hood and mount with lag bolts (provided by others).
The following hardware is supplied for the assembly of the inlet hoods; #10 TEK self tapping screws, 3/8" nuts/bolts/washers, 3/16" rivets and foam gasket tape.

Step 11.2 Inlet Hoods with Filter Rack Assembly

Step 11.2.1 Seal around the perimeter of the inlet of the air handler with the provided foam gasket tape.

Step 11.2.2 Mount the upper inlet hood right and left side (flanges will be facing out), with the bolts and washers provided.

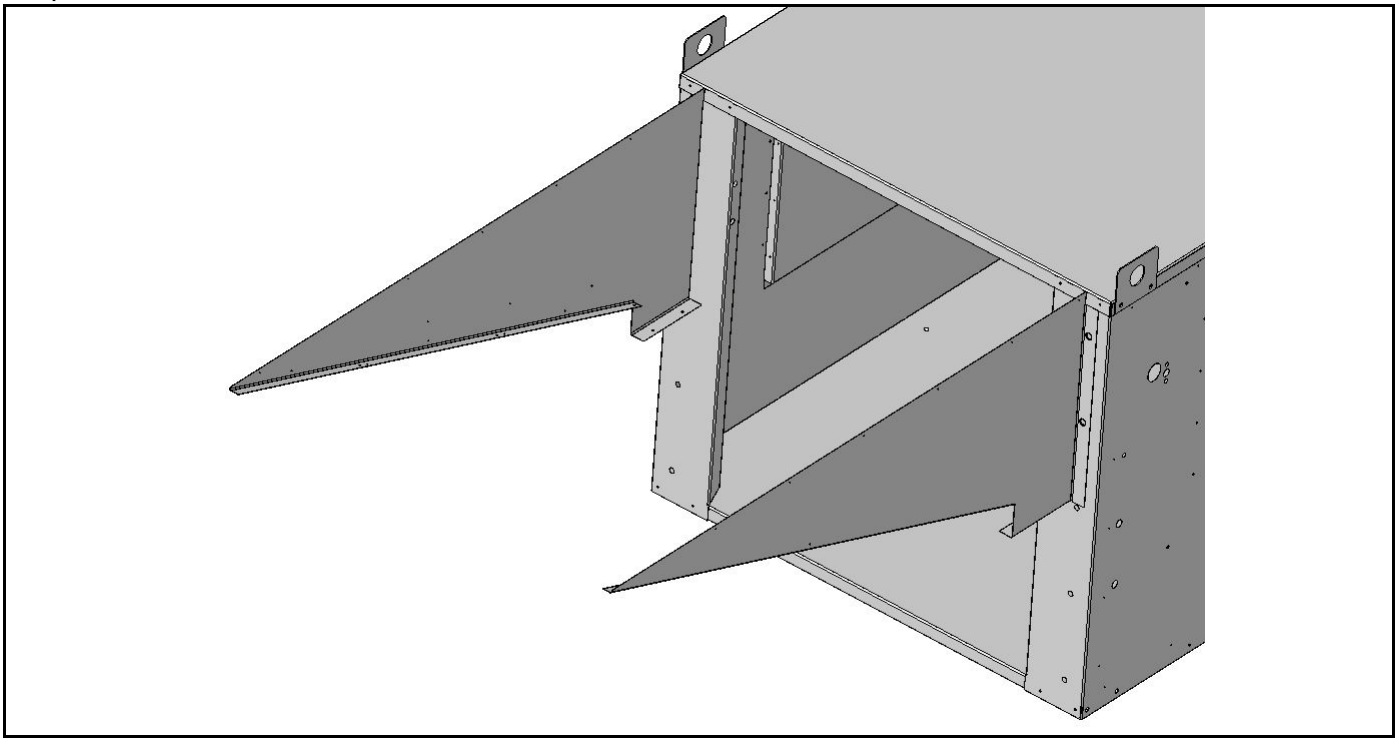

Step 11.2.3 Attach the upper hood roof with the provided TEK screws along the left and right side and upper edge to the air handler.

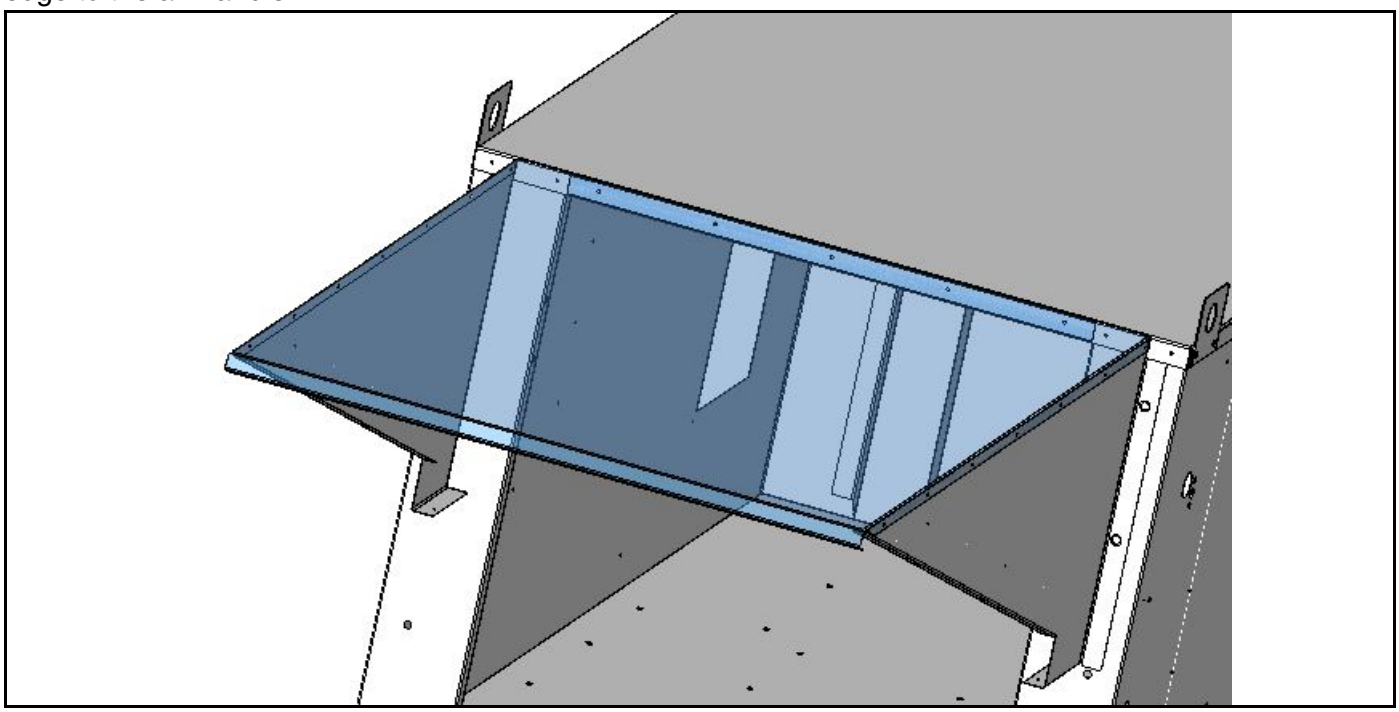

Step 11.2.4 Attach the bottom filter rail for the upper inlet hood to the hood using the provided rivets.

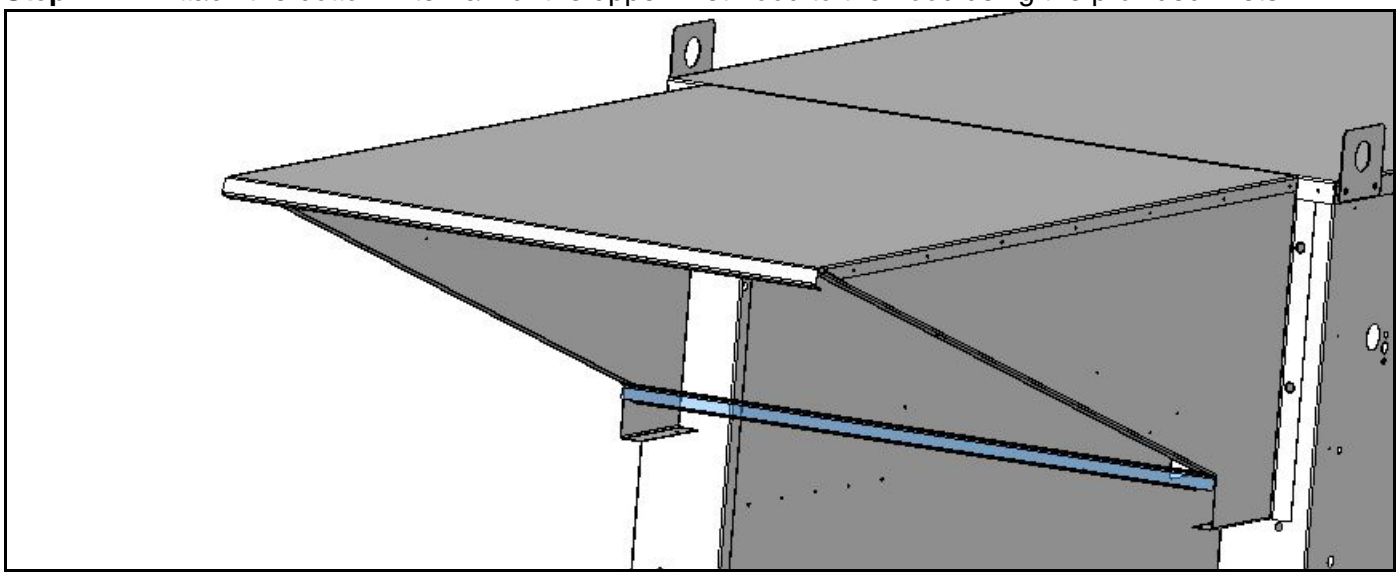

Step 11.2.5 Mount the lower inlet hood right and left side (flanges will be facing out), with the bolts and washers provided and the upper edge of these sides to the lower portion of the upper hood with the TEK screws provided.

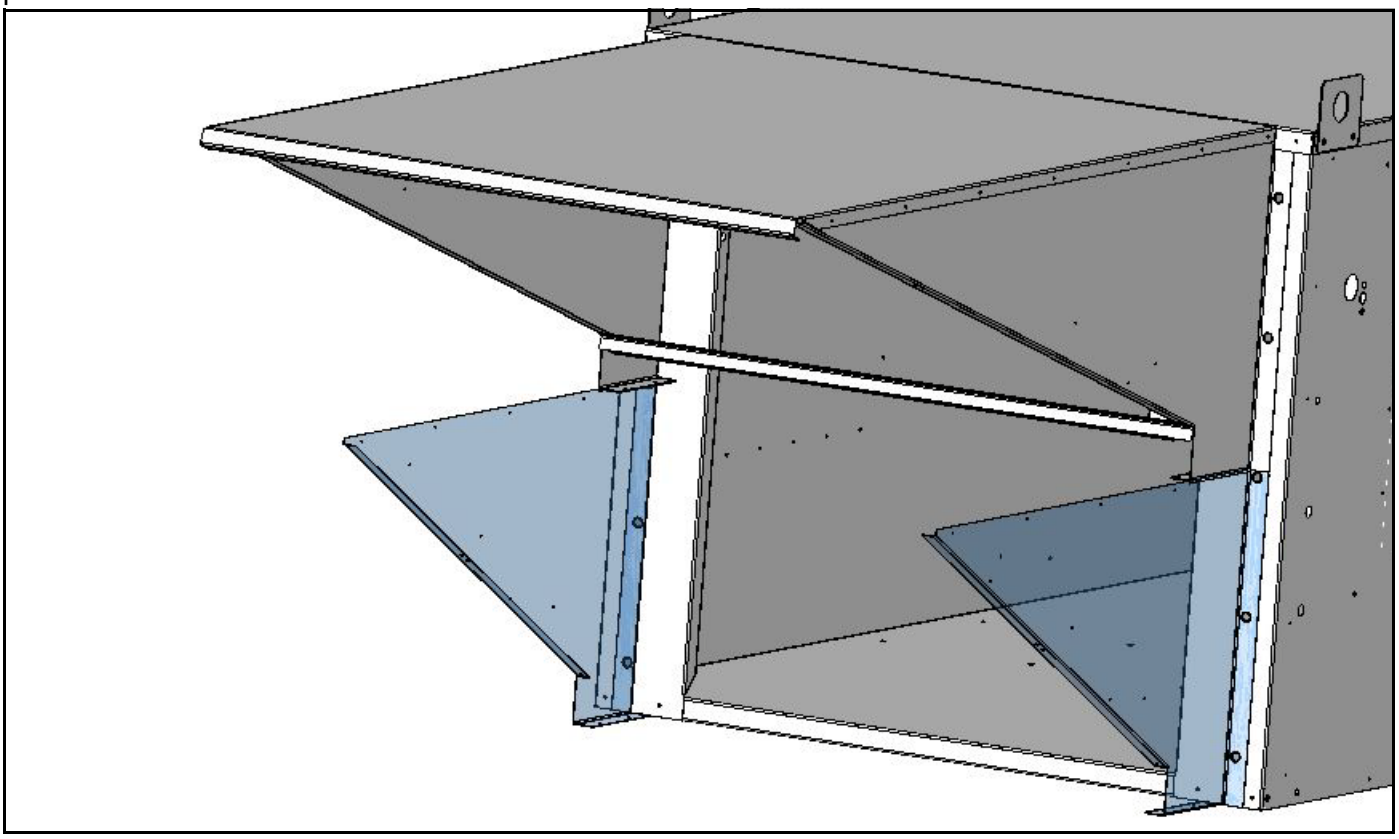

Step 11.2.6 Attach the bottom filter rail for the lower inlet hood and attach to the left and right side of the hood and to the air handler using the provided TEK screws.

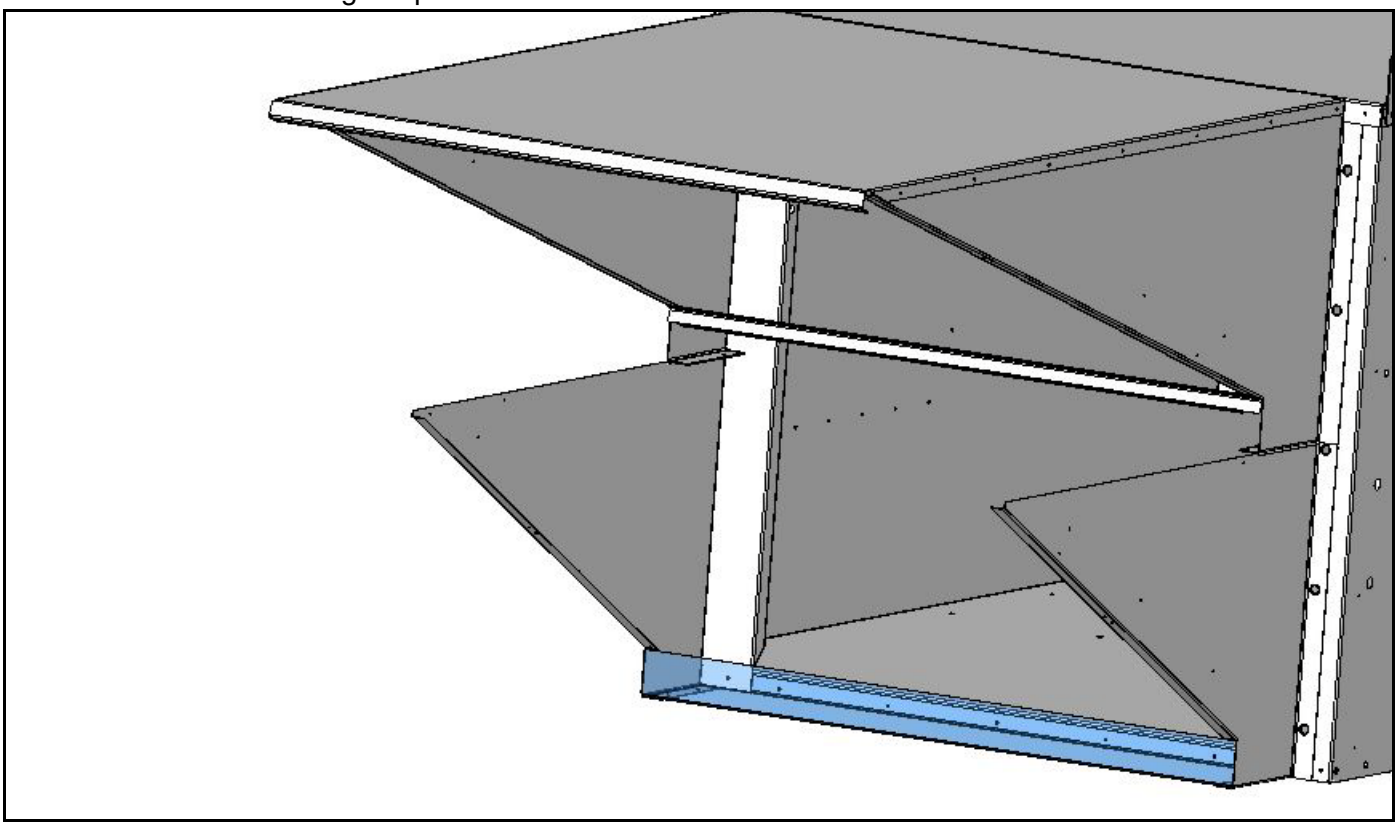

Step 11.2.7 Attach the lower hood roof with the provided TEK screws along the left and right side.

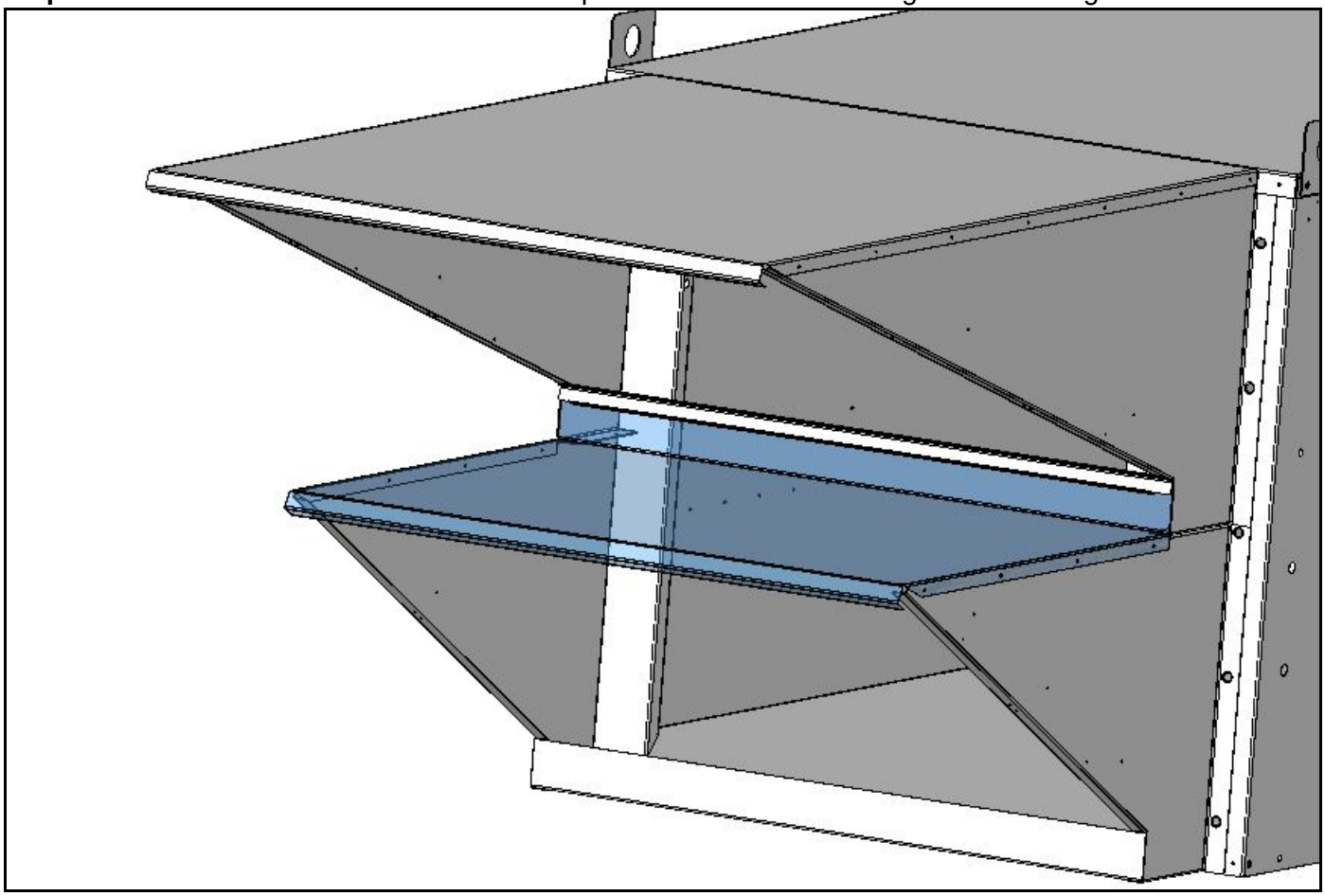

Step 11.2.8 Attach the remaining filter rails and the rain gutters to the upper and lower hood sides with the provided rivets.

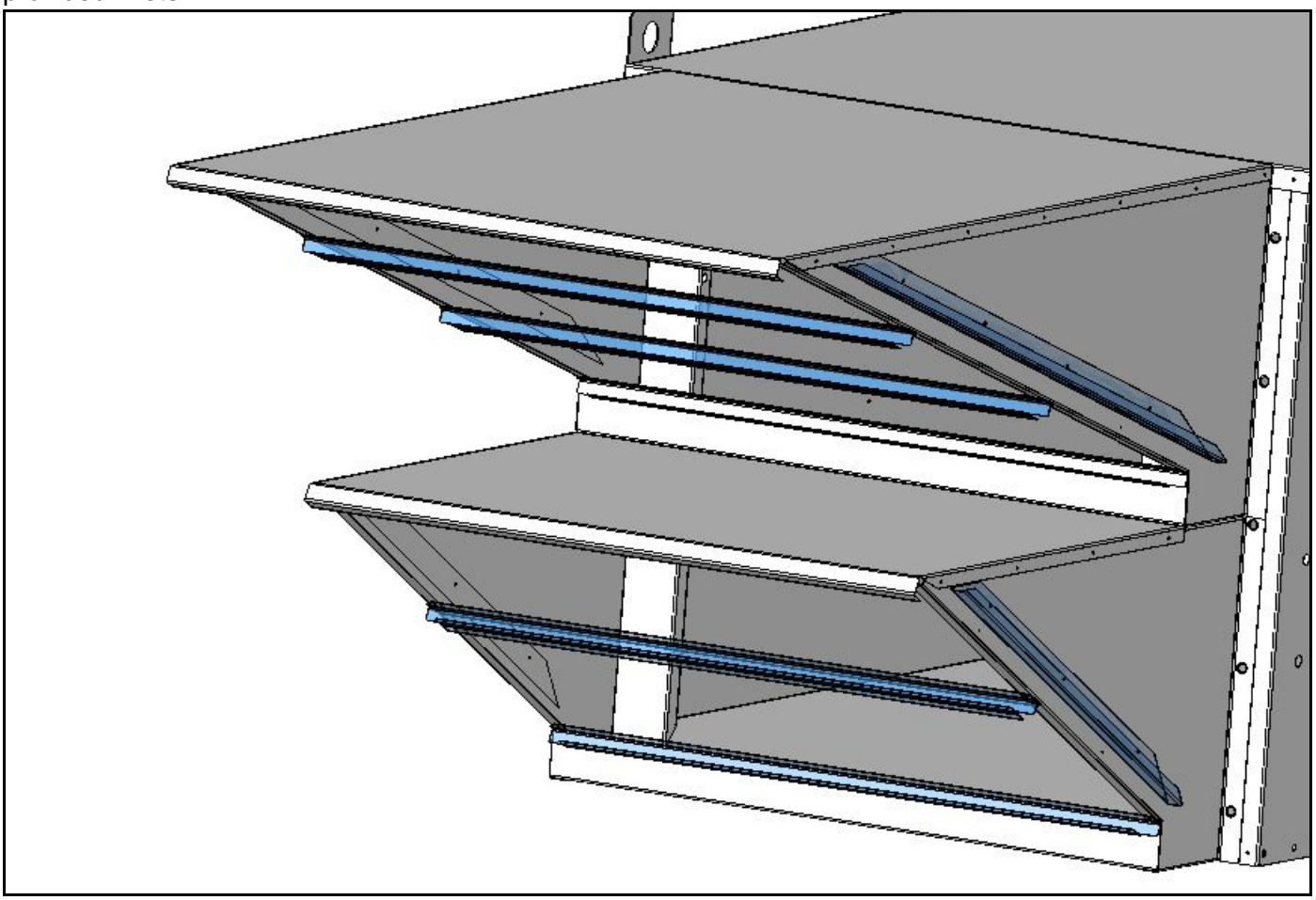

Step 11.2.9 Attach filter retaining latches with the provided rivets.

Step 11.2.10 Caulk seam between air handler and inlet hood.

Step 11.2.11 Load filters into the inlet hood, checking to see that each filter is in the proper orientation by verifying that the arrow on the side of the filter points in the direction of air flow. All of the arrows should be pointing towards the air handler when installed in the proper orientation. Once filters are installed, close filter clips installed previously

Inlet Hood Mounted Poly Panel Filters			
Model		**Size**	**Quantity**
2005	(in) (cm)	25 x 25 x 1 (63.5 x 63.5 x 2.5)	2
2010	(in) (cm)	20 x 20 x 1 (50.8 x 50.8 x 2.5)	6
2010B	(in) (cm)	24 x 20 x 1 + 20 x 20 x 1[5 each] (60.9x50.8x2.5 + 50.8x50.8x2.5)	10
2020	(in) (cm)	18 x 24 x 1 (63.5 x 63.5 x 2.5)	18
2030	(in) (cm)	24 x 75 x 1 (63.5 x 190.5 x 2.5)	6

Step 11.3 Inlet Hoods for Air Handler with Filter Section

Step 11.3.1 Seal around the perimeter of the inlet of the filter section with the provided foam gasket tape.

Step 11.3.2 Attach the left and right side of the inlet hood (flanges facing in) to the top of the inlet hood using the TEK screws provided.

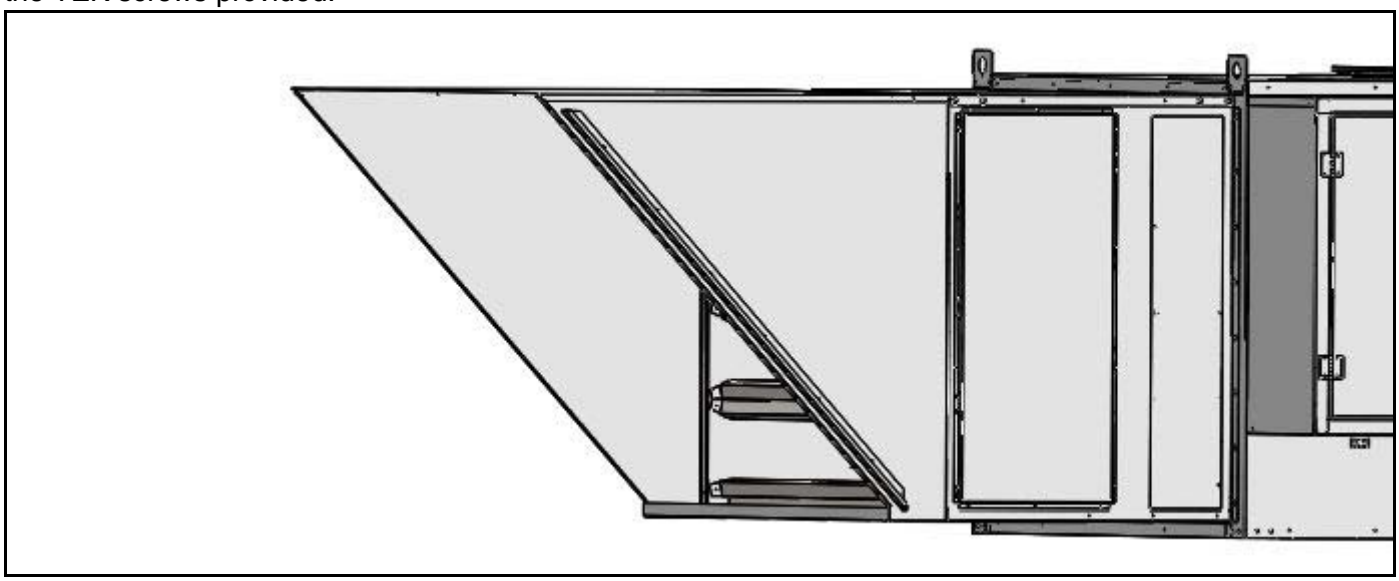

Step 11.3.3 Attach the inlet hood to the filter section using the nuts/bolts/washers provided. Bolt it to each corner of the filter section. Use the provided TEK screws to attach the inner flanges to the right and left side of the filter section.

Step 11.3.4 Attach the rain gutters to both sides of the inlet hood using the provided rivets.

Step 11.3.5 Caulk seam between filter section and inlet hood.

SECTION 12: DAMPERS

⚠ WARNING			
Crush Hazard	**Falling Hazard**	**Severe Injury Hazard**	**Cut/Pinch Hazard**
Use proper lifting equipment and practices.	**Use proper safety equipment and practices to avoid falling.**	**Use proper lifting practices and equipment.** **Equipment and accessories are heavy.**	**Wear protective gear during installation, operation and service.** **Edges are sharp.**
Failure to follow these instructions can result in death, injury or property damage.			

12.1 Discharge Damper

Discharge dampers are shipped loose. Discharge dampers are designed to be mounted downstream of the air handler in ductwork. A qualified contractor/installer must make appropriate allowances for duct connections.

To install the discharge damper on an interior wall, drill holes every 8" (20.5 cm) in the flanges on all four sides of the discharge damper to accommodate lag bolts (provided by others).

Discharge dampers are not recommended to be mounted directly to the air handler.

FIGURE 14: Motorized Discharge Damper (2005 - 2030)

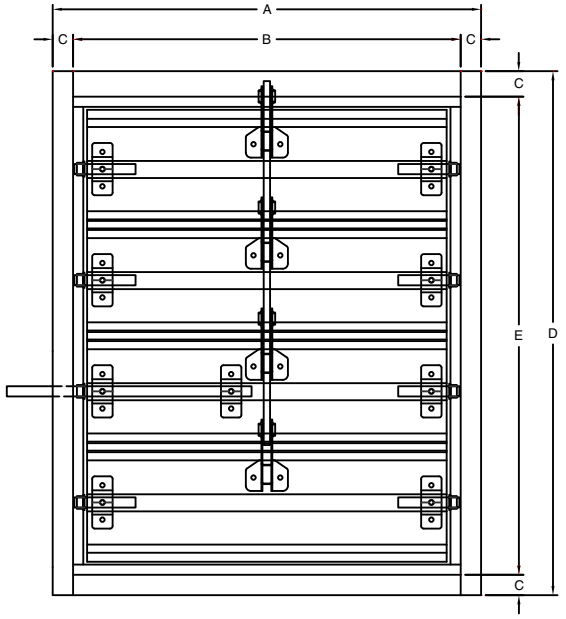

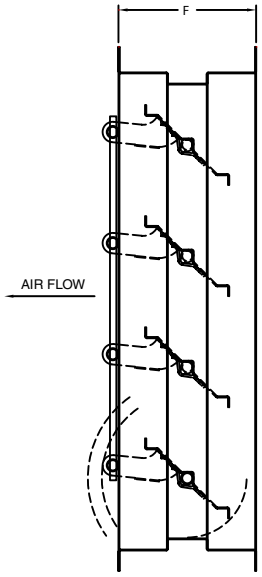

NOTE:1) CONTRACTOR/INSTALLER MUST MAKE APPROPRIATE ALLOWANCES FOR DUCT CONNECTIONS.
2) NUMBER OF LOUVERS WILL VARY.
3) MOUNTED DOWNSTREAM OF AIR HANDLER IN DUCT WORK. DOES NOT MOUNT DIRECTLY TO AIR HANDLER. FIELD WIRED TO PROVIDED TERMINALS ON CONTROL PANEL.

Model		A	B	C	D	E	F	Weight lbs (kg)
2005	in	18.6	15.6	1.5	16.5	13.5	8.0	25 (11)
	cm	47.2	39.6	3.8	41.9	34.2	20.3	
2010	in	28.0	25.0	1.5	26.1	23.1	8.0	51 (23)
	cm	71.1	63.5	3.8	66.2	58.6	20.3	
2010B	in	30.8	27.8	1.5	30.6	27.6	8.0	65 (29)
	cm	78.2	70.6	3.8	77.7	70.1	20.3	
2020	in	34.3	31.3	1.5	34.6	31.6	8.0	83 (38)
	cm	87.1	79.5	3.8	87.8	80.2	20.3	
2030	in	39.8	36.8	1.5	39.8	36.8	8.0	111 (50)
	cm	101.0	93.4	3.8	101.0	93.4	20.3	

12.2 Inlet Damper

Inlet dampers are factory mounted to the inlet of the air handler (covering the inlet opening). The inlet damper has four outward-turned flanges. Based on air handler style, damper may include upper and lower damper.

SECTION 13: DISCHARGE HEADS AND SPLASH PLATES

⚠ WARNING

Crush Hazard	**Falling Hazard**	**Severe Injury Hazard**	**Cut/Pinch Hazard**
Use proper lifting equipment and practices.	**Use proper safety equipment and practices to avoid falling.**	**Use proper lifting practices and equipment.** **Equipment and accessories are heavy.**	**Wear protective gear during installation, operation and service.** **Edges are sharp.**

Failure to follow these instructions can result in death, injury or property damage.

13.1 Three-Way Discharge Head Installation

All discharge heads are shipped assembled. The discharge head is designed for mounting to the face of the air handler (covering the discharge opening) or to an interior wall. All discharge heads must be field supported (by others). The discharge head has four outward-turned flanges. If the discharge head is to be installed to the face of the air handler, install hardware (provided by others) on all four sides of the discharge head.

To install the discharge head on an interior wall, drill holes every 8" (20.5 cm) in the flanges on all four sides of the discharge heads to accommodate lag bolts (supplied by others). Sheet metal (supplied by others) may be required. *See Page 32, Figure 15* for the three-way discharge head available.

FIGURE 15: Three-Way Discharge Head

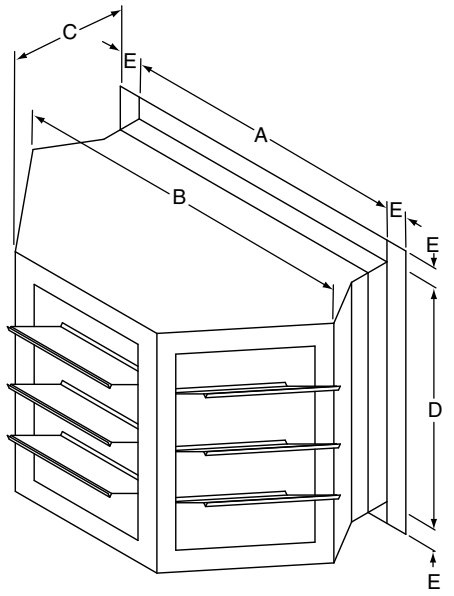

Model		A	B	C	D	E	Weight	
							lbs	kg
2005	(in)	16	35.5	22.8	13.6	2.0	40	18
	(cm)	(40.6)	(90.2)	(57.9)	(34.5)	(5.1)		
2010	(in)	23.4	55.7	35.2	25.3	2.0	50	23
	(cm)	(59.4)	(141.5)	(89.4)	(64.3)	(5.1)		
2010B	(in)	27.8	55.7	35.8	27.8	2.0	84	38
	(cm)	(70.6)	(141.5)	(90.9)	(70.6)	(5.1)		
2020	(in)	34.5	77.3	47.7	32.4	2.0	120	54
	(cm)	(87.6)	(196.3)	(121.2)	(82.3)	(5.1)		
2030	(in)	37.4	86.8	51.8	37.4	2.0	160	73
	(cm)	(95.0)	(220.5)	(131.6)	(95.0)	(5.1)		

13.2 Splash Plate Installation

The splash plate is designed to hang directly from a horizontal air handler with a bottom discharge. Before the splash plate can be installed on the air handler, first drill four holes in the air handler floor. These holes to be centered over the entire blower discharge opening. These holes should be approximately 5/8" (15.9 mm) in diameter to accommodate 1/2" hanger rods (supplied by others). These holes should be located as shown in the diagram on *Page 34, Figure 17*.

To attach all of the hanger rods to the splash plate, start by threading a flanged nut onto each hanger rod. Then, slip each hanger rod down through a hole located in each corner of the splash plate. Next, feed a flanged nut onto the rod below the splash plate *See Page 33, Figure 16*. The hanger rods should be attached to the air handler in the same manner as the splash plate, with a flanged nut on both sides of the air handler floor. Adjusting the nuts will level the splash plate. Torque hardware after leveling.

FIGURE 16: Splash Plate

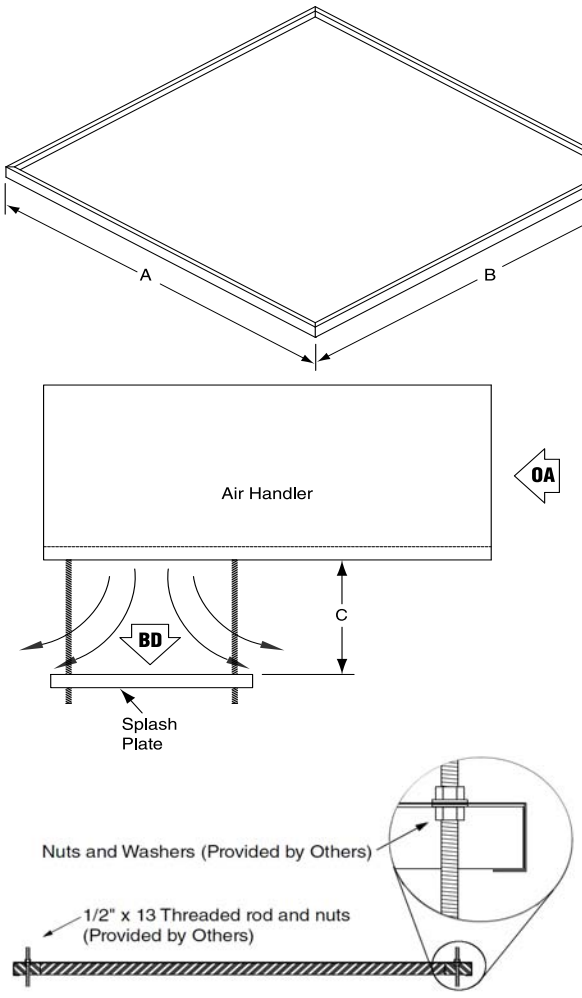

Model		A	B	C (min)	C (max)
2005	(in)	25.5	27.6	15.0	20.0
	(cm)	(64.8)	(70.1)	(38.1)	(50.8)
2010	(in)	37.0	35.1	18.0	27.0
	(cm)	(94.0)	(89.2)	(47.5)	(68.6)
2010B	(in)	39.8	39.6	18.0	27.0
	(cm)	(101.1)	(100.6)	(47.5)	(68.6)
2020	(in)	43.3	43.6	25.0	38.0
	(cm)	(110.0)	(110.7)	(63.5)	(96.5)
2030	(in)	48.7	48.7	30.0	45.0
	(cm)	(123.7)	(123.7)	(76.2)	(114.3)

FIGURE 17: Mounting Hole Locations

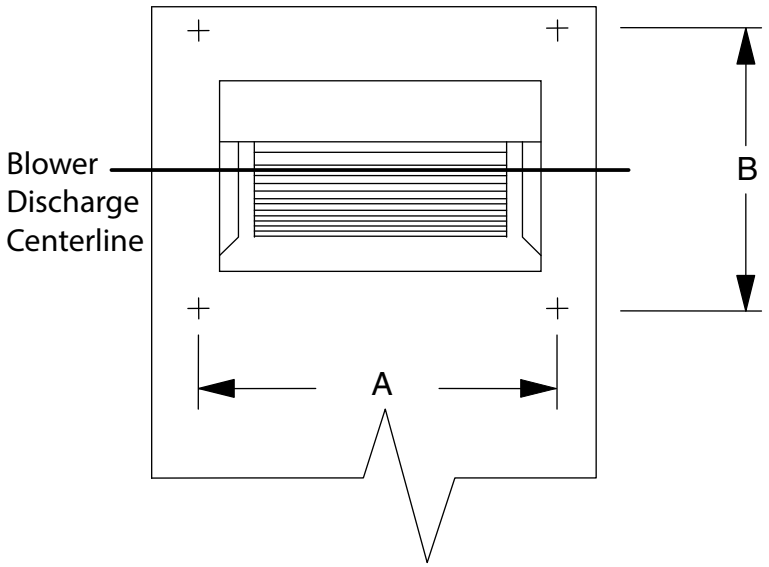

Model		A	B
2005	(in)	24.6	22.5
	(cm)	62.5	57.1
2010	(in)	32.1	34.0
	(cm)	81.5	86.4
2010B	(in)	36.6	36.8
	(cm)	93.0	93.4
2020	(in)	40.6	40.3
	(cm)	103.1	102.3
2030	(in)	45.7	45.7
	(cm)	116.0	116.0

SECTION 14: DUCT CONSIDERATIONS

⚠ WARNING

Falling Hazard	Cut/Pinch Hazard
Use proper safety equipment and practices to avoid falling.	**Wear protective gear during installation, operation and service.** **Edges are sharp.**

Failure to follow these instructions can result in death, injury or property damage.

The air handler has been designed to operate at the specific air volume and external static pressure that was ordered (air handlers set-up to accept an external static pressure (ESP) of 1 in wc (2.5 mbar). This static pressure is generated by any additional components that are added to the heater (i.e. inlet hood, filter section, dampers, ductwork, discharge heads, etc). Additional static pressure beyond that ordered will affect the performance of the air handler and lessen the air volume that can be delivered.

Proper engineering methods need to be employed when calculating duct and component static pressure (i.e. 2009 ASHRAE Handbook - Fundamentals, Chapter 21). Accessory pressure drops are available on *See Page 9, Table 4 and Table 5*.

The system ductwork must comply with Sheet Metal and Air Conditioning Contractors Nationals Association (SMACNA) or any other recognized standards.

As a general rule, all discharge ducts should have a straight run of at least 3 hydraulic duct diameters after the air handler before adding any fittings, elbows, restrictions, etc. Return ducts should have the same straight run before attaching to the unit.

Hydraulic duct diameter for round ducts in inches:

Dh = d

Dh: hydraulic diameter

d: round duct inside diameter

Hydraulic duct diameter for rectangular ducts (in inches):

Dh = (2*H*W)/(H+W)

Dh: hydraulic diameter

H: rectangular duct inside height

W: rectangular duct inside width

The air handler is not designed to support the weight of ductwork. Ductwork must be constructed in a fashion that is self-supporting. Ductwork should be straight, elbows should be minimal and any transitions should be smooth.

Depending on the options ordered with the air handler, flanges (either external or internal) may be provided to facilitate connection of ductwork. In cases where flanges are not provided, flat surfaces on the exterior skin of the air handler are provided to facilitate connection of ductwork.

14.1 Inlet Duct Work

Inlet duct work height and width must be no smaller than the air handler inlet height and width and supply only fresh air to the air handler.

14.2 Return Duct Work

Return duct work height and width must be no smaller than the air handler inlet height and width and supply only fresh air to the air handler.

14.3 Discharge Duct Work

Discharge duct work height and width must be no smaller than the air handler discharge height and width.

SECTION 15: GAS PIPING

⚠WARNING

Explosion Hazard

Leak test all components of gas piping before operation.

Gas can leak if piping is not installed properly.

Do not high pressure test gas piping with air handler connected.

Failure to follow these instructions can result in death, injury or property damage.

15.1 Gas Manifolds

All gas piping to the air handler must comply with:

United States: Refer to NFPA 54/ANSI Z223.1 - latest revision, National Fuel Gas Code.

Canada: Refer to CSA B149.1 - latest revision, Natural Gas and Propane Installation Code.

The air handlers are available with three gas manifold options.

- American National Standards Institute (ANSI) compliant manifold: (*See Page 37, Figure 18* for 2005. *See Page 37, Figure 19* for 2010 - 2030.
- Factory Mutual (FM)-compliant manifold: (*See Page 37, Figure 18* for 2005. *See Page 38, Figure 20* for 2010 - 2030.
- XL compliant manifold: (*See Page 37, Figure 18* for 2005. *See Page 38, Figure 21* for 2010 - 2030.

15.2 Gas Piping and Pressures

The air handler is equipped with a gas manifold suitable for connection to supply pressure of up to:

- 14 in wc maximum (34.9 mbar) (Model 2005)
- 5 p.s.i. maximum (2010 - 2030 with FM or XL compliant manifold).

When gas supply exceeds the above-listed maximum gas pressures, an additional high pressure gas regulator will be required to assure that the correct gas pressure is supplied to the regulator. Pressure should be measured between the high pressure gas regulator and safety shut off valve. Minimum gas pressure as indicated on data plate must be measured with the burner operating in high fire.

Table 7: Gas Manifold Size

Model	2005	2010	2010B	2020	2030
Gas NPT Connection	¾"	1"	1¼"	1½"	2"

15.3 Gas Manifold Venting

Vent valves fitted on XL compliant manifolds must be piped to the atmosphere outside the structure and in accordance with applicable codes. This is the responsibility of the installer.

15.3.1 Main Gas Regulator Venting

The main regulator used on 1¼" and larger manifolds must be piped to the atmosphere outside the structure. This is the responsibility of the installer.

15.3.2 Vent Line Installation

The following may be used as a guideline for installation, but all applicable codes and regulations must be followed.

- Natural gas and LPG are toxic and flammable substances. They must be released where they will not cause personal injury or property damage. The end of the vent line must be located where it is safe to release gas.
- Pipe the vent line outside the structure.
- Use as short a vertical run of pipe as possible.
- Do not run pipe from a high point to a lower point to avoid obstacles.
- Use a minimum number of bends.
- Do not downsize the pipe from the origination point (must be same size or larger).
- Make sure vent line is free from obstructions.
- Do not group lines together into a common header.
- The outside termination must have a weatherproof cap or be directed downward for protection from the elements and must be screened to prevent the entry of any objects.

FIGURE 18: ANSI/FM/XL-Compliant Manifolds (2005)

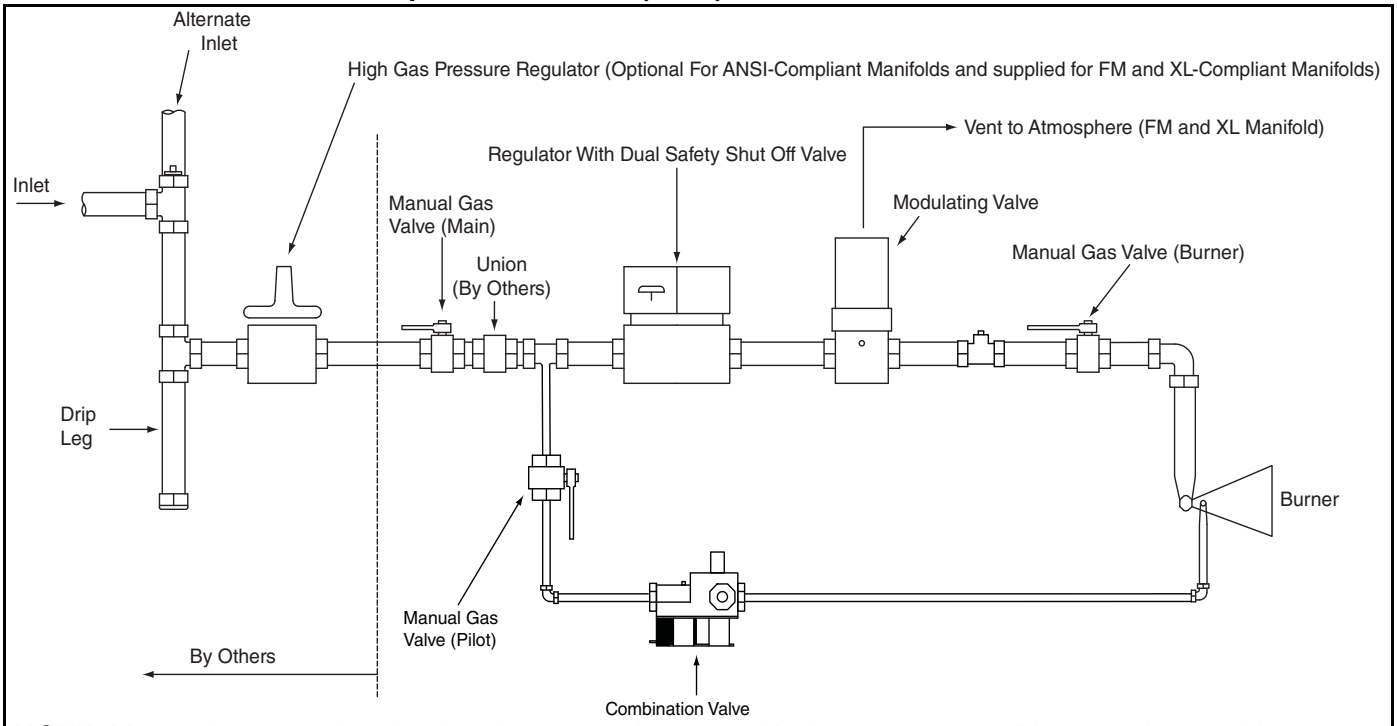

NOTE: Vent valves must be piped to the atmosphere outside the structure and in accordance with applicable codes.

FIGURE 19: ANSI-Compliant Manifold (2010 - 2030)

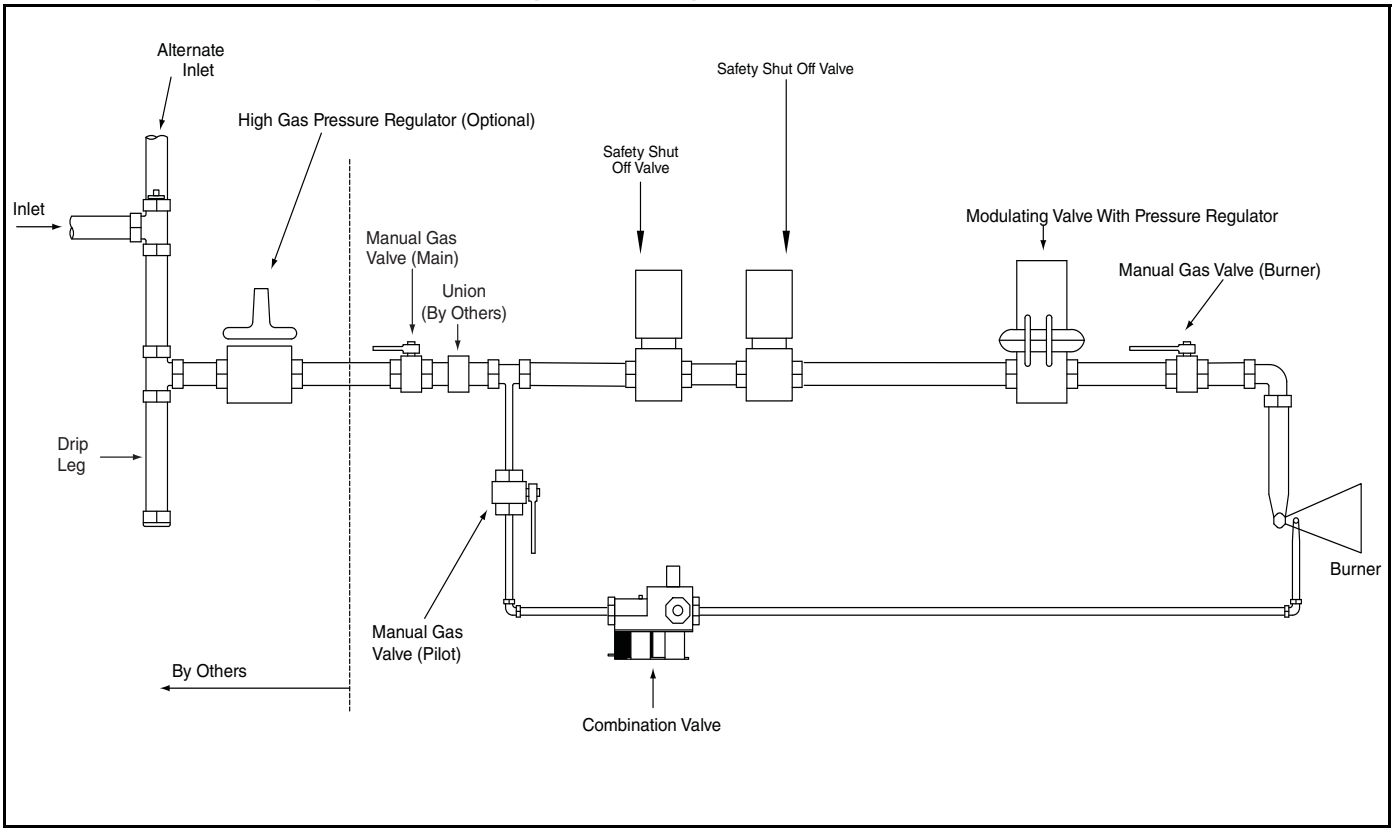

FIGURE 20: FM-Compliant Manifold (2010 - 2030)

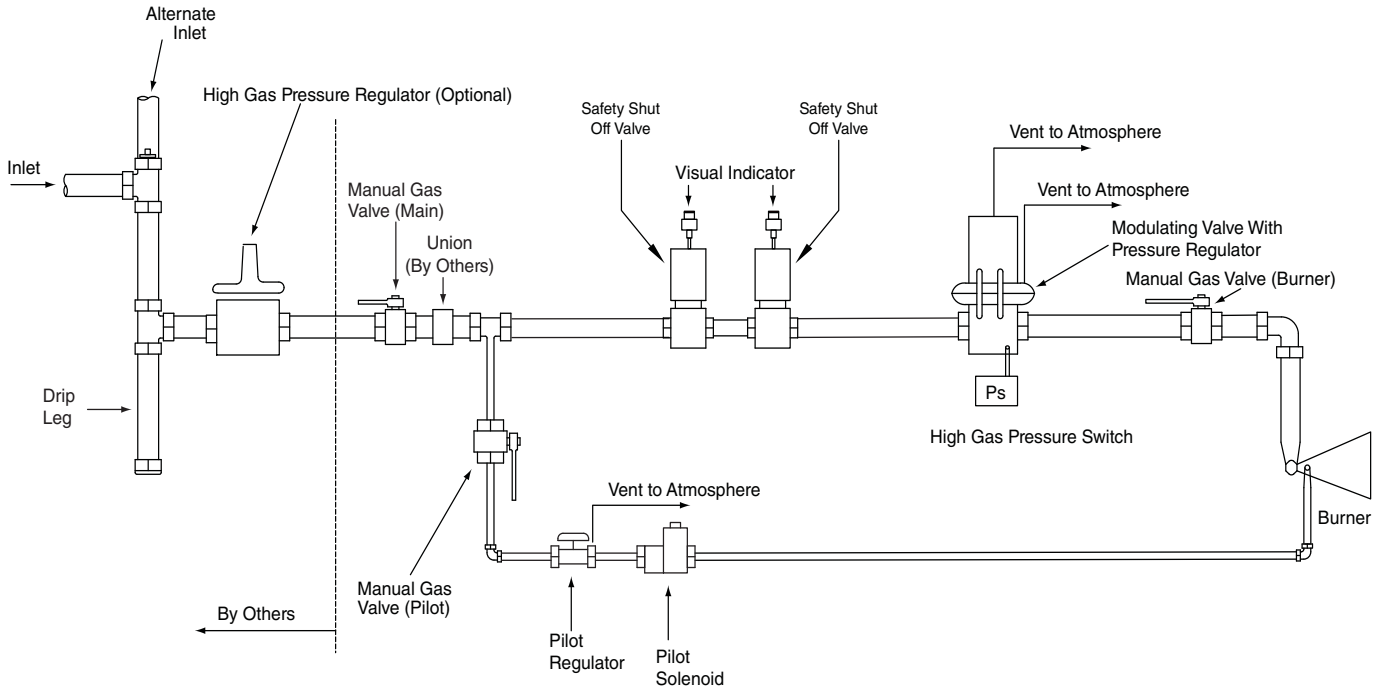

NOTE: Vent valves must be piped to the atmosphere outside the structure and in accordance with applicable codes.

FIGURE 21: XL-Compliant Manifold (2010 - 2030)

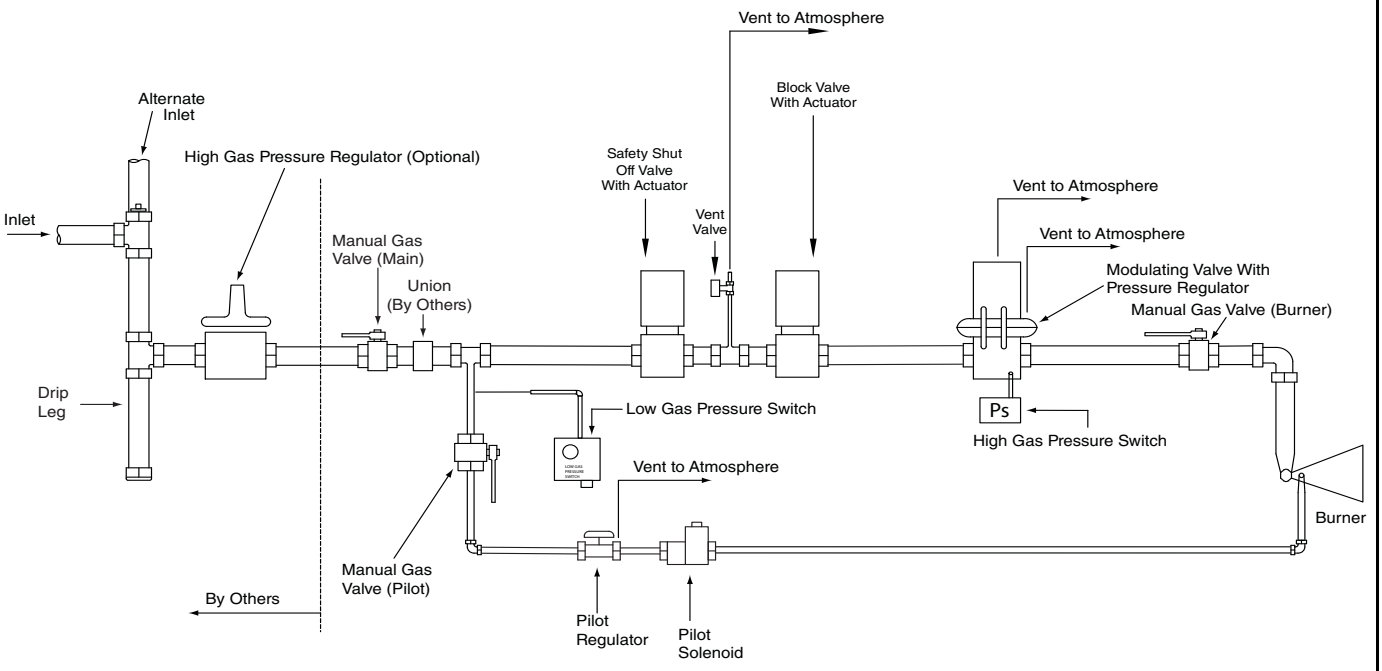

NOTE: Vent valves must be piped to the atmosphere outside the structure and in accordance with applicable codes.

15.4 Gas Piping

The gas manifold extends through the side of the control cabinet for models 2005 - 2030. The factory piping terminates with a female pipe connection in the manual gas valve. The manual main gas shutoff valve is shipped loose for field installation. A union must also be installed (supplied by others) between the supplied manual gas valve main and the first tee pipe. Be sure that the fuel supply pipe connected at this point is large enough to ensure the proper gas flow and line pressure at the inlet of the air handler. The piping must comply with:

United States: Refer to NFPA 54/ANSI Z223.1 - latest revision, National Fuel Gas Code.

Canada: Refer to CSA B149.1 - latest revision, Natural Gas and Propane Installation Code.

Gas supply piping must conform to best building practices and local codes. During installation of the gas piping, be sure that no piping restricts accessibility to the air handler or its removable access doors.

Lockable manual shut-off valve must be added by the installer in compliance with Occupational Safety and Health Administration (OSHA) regulations.

15.5 Pressure Test Ports

There are 1/8" (3.2 mm) and 1/4" (6.4 mm) pressure test ports located on the manifold. The test ports are available to measure the manifold inlet gas pressure and the burner gas pressure during burner setup.

15.5.1 Manifold Inlet Gas Pressure

The pressure port for measuring manifold inlet pressure is located on the inlet side of the first safety shutoff valve. Refer to the unit rating plate for the acceptable inlet gas pressure.

15.5.2 Burner Gas Pressure

A pressure tap is used to measure negative airflow at the burner and to set high fire gas pressure. On air handlers equipped with a M611 modulating valve, the pressure tap is located on a tee between the M611 valve and the burner. *See Page 39, Figure 22 and Page 68, Figure 37*. On air handlers equipped with the MR212 modulating valve, the pressure tap could be located on the downstream side of the MR212 valve, on a T-fitting coming off the outlet pressure tap on the MR212 valve or between the MR212 valve and the burner. *See Page 39, Figure 23* and *Page 67, Figure 35*.

FIGURE 22: Plug Tapping (2005)

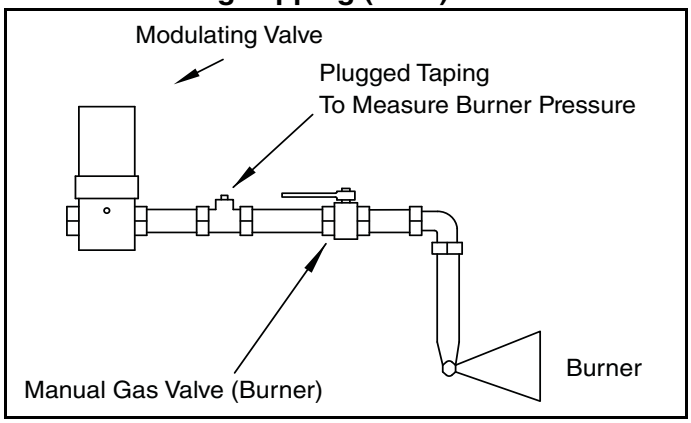

FIGURE 23: Plug Tapping (2010 - 2030)

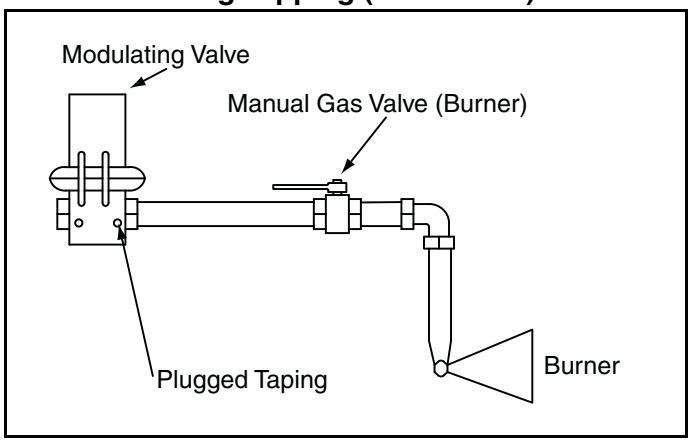

15.6 Line Pressure Test - Leak Testing

The air handler and its individual shut-off valve must be disconnected from the gas supply piping systems during any pressure testing of that system at test pressures in excess of 14 in wc (34.9 mbar). The air handler must be isolated from the gas supply piping system by closing its individual manual gas valve that is located immediately upstream of the safety shut-off gas valve.

SECTION 16: ELECTRICAL

⚠ DANGER

Electrical Shock Hazard

Disconnect electric before service.

More than one disconnect switch may be required to disconnect electric from equipment.

Equipment must be properly grounded.

Failure to follow these instructions can result in death or electrical shock.

Each air handler is equipped with a wiring diagram which will vary depending on the type of remote panel and/or options supplied.

Air handlers can also be supplied as building management system (BMS)-ready. In this case, a remote panel is not supplied.

Note: Spark testing or shorting of the control wires by any means will render the transformers inoperative.

Each unit is equipped with a fused rotary disconnect. The rotary disconnects are for copper wire only.

16.1 Disconnect Fuse Sizing

The fuse classification must be determined by the service disconnect rating plate and all applicable codes. Fuse sizing is determined by the motor size, control current and supply voltage. Fuses that are being replaced must be replaced with the same type, size and class of fuse that was supplied with the air handler. For additional information or to confirm original fuse specifications, consult the factory.

Table 8: Minimum and Maximum Fuse Size by Motor Size and Supply Voltage

	Electrical Characteristics				
Motor Size HP(kW)	**208/3/60**	**230/3/60**	**460/3/60**	**575/3/60**	**230/1/60**
2(1.5)	7.3-10.2	6.9-9.6	3.4-4.8	2.6-3.6	13.3-18.6
3(2.2)	10.1-14.2	9.3-13.0	4.6-6.5	3.7-5.2	17.3-24.2
5(3.7)	15.4-21.6	15.1-21.1	7.5-10.6	6.1-8.5	24.3-34.0
7.5(5.6)	23.1-32.4	21.3-29.8	10.6-14.9	8.3-11.6	32.3-45.2
10(7.5)	30.4-42.6	28.1-39.3	14.0-19.7	10.6-14.8	40.3-56.4
15(11.2)	42.4-59.4	39.3-55.0	19.6-27.5	16.8-23.5	-
20(14.9)	51.4-72.0	49.3-69.0	24.6-34.5	19.8-27.7	-
25(18.6)	66.4-93.0	61.3-85.8	30.6-42.9	24.5-34.3	-
30(22.4)	78.4-109.8	73.3-102.6	36.6-51.3	29.6-41.4	-
40(29.8)	-	-	47.6-66.7	38.0-52.6	-
50(37.3)	-	-	59.5-83.3	48.1-66.7	-

16.2 Wiring and Electrical Connections

All electrical wiring and connections, including electrical grounding, must comply with:

United States: Refer to National Electrical Code®, NFPA 70 - latest revision. Wiring must conform to the most current National Electrical Code®, local ordinances, and any special diagrams furnished.

Canada: Refer to Canadian Electrical Code, CSA C22.1 Part 1 - latest revision.

Check rating plate on air handler for supply voltage and current requirements.

If any of the original control wire supplied with the air handler must be replaced, replace it with type MTW 105°C, 600 V, 16 gauge wire or equivalent, except for temperature control wiring, which must be a minimum of 20 AWG Type Beldon 5401FE CMR 75C shielded or equivalent.

For all other wires, replace with the equivalent size and type of wire that was originally provided with the air handler.

16.3 Remote Panel

The remote panel must be wired as shown on the electrical schematic. For wire gauge sizes, *see Page 41, Table 9*. All power supply and motor wiring must be minimum type THWN with a 167° F (75° C) temperature rise.

16.3.1 Remote Panel Mounting Distance

If the interconnection wiring between the remote panel and the air handler control enclosure is run in a single conduit, the wire run can be as long as 100' (30 m). For longer wire runs, consult the factory. If the interconnection wiring between the remote panel and the air handler control enclosure is run in two conduits (separating the shielded cable and the 120 V power supply for the remote panel), the wire run can be as long as 200' (60 m). For longer wire runs, consult the factory. Care should be used to avoid running the interconnect wiring near large industrial loads or high voltage wire runs as that may further limit the length of the interconnect wire run.

Table 9: Control Voltage Wiring For All Control Systems

Volts	Wire Gauge	Max Wire
120	18	150' (45 m)
120	16	250' (75 m)
120	14	350' (106 m)

NOTE: Wiring for temperature controls must be run in shielded cable as indicated on the wiring diagram.

16.3.2 Low Voltage Control Wiring

Low voltage (24 V - AC/DC) control wiring in excess of 100' (30.5 m) in length should be in its own separate conduit run to prevent interference.

16.4 Motor Current Draw

For specific current requirements, see rating plate located on the blower motor. Current draw may be adjusted downward by reducing blower rotations per minute (RPM) or by increasing external static pressure.

16.5 Control Current Draw

The maximum current draw for an air handler's controls and accessories is 3A.

16.6 Safety Systems

Safety systems are required for proper performance of the air handler. The air handler shall not be permitted to operate with any safety system disabled. If a fault is found in any of the safety systems, then the system shall be repaired only by a contractor qualified in the installation and service of gas fired heating equipment, using only components that are sold and supplied by Rapid Engineering LLC. Refer to *Page 42, Table 10* for a brief description of each safety device, its location and its switching voltage.

Table 10: Safety Systems

Safety Controls	Location	Voltage
Manual Reset High-Temp Limit (All Models)	Blower Discharge	120
Pressure Switches (All Models)	Air Handler Control Enclosure	120
Flame Control (2010/2010B/2020/2030)	Air Handler Control Enclosure	120
Flame Control (2005)	Air Handler Control Enclosure	24
Discharge Temperature Monitor (All Models)	Blower Discharge	24
AM Resistor (AM/VAV Style)	Air Handler Control Enclosure	24

16.6.1 Manual Reset High Temperature Limit Switch

If for any reason, the temperature of the air at the discharge of the blower reaches the limit set point of 160° F (71.1° C), the high temperature limit switch will open the circuit to the burner system and discontinue all burner functions. Events that could result in excessive discharge air temperatures include if the burner modulation amplifier is defective (i.e. temperature sensor goes open circuit) or if a surge in gas pressure reaches the burner. Restarting of the burner can only be accomplished after the limit has cooled down and the reset button on the switch has been depressed. This switch is located on the blower housing inside the air handler.

16.6.2 Pressure Switches

The low airflow velocity pressure switch monitors the airflow (differential pressure) across the burner. When the airflow across the burner reaches the proper velocity (volume) for combustion, the switch closes. When the switch closes, it permits the flame safeguard relay to begin ignition. This switch is factory set at 0.32 in wc (0.8 mbar). The high velocity pressure switch will open if the airflow across the burner reaches its maximum allowable limit. This switch is factory set at 1.40 in wc (3.5 mbar). The pressure switch is a safety device, which cannot be field-adjusted or tampered with.

16.6.3 Gas Pressure Switches

Gas pressure switches are standard on certain models (FM compliant gas trains above 2,500 MBH and XL compliant gas trains) and are also available as an option on the others.

The function of the gas pressure switches is to protect against insufficient, lack of gas pressure and excessive pressure in the system.

On the low gas pressure switch side, this switch opens its internal switch which shuts the burner down and prevents its operation due to insufficient gas pressure.

On the high gas pressure switch side, its internal switch will open, shutting down the burner due to excessive gas pressure passing through the gas train.

The settings of the gas pressure switches are field adjustable. The one monitoring the incoming gas pressure is the low gas pressure switch. The low gas pressure switch must be set to the minimum required gas pressure as indicated on the data plate.

The high gas pressure switch must be set to 1 in w.c. (2.5 mbar) above high fire setting established during commissioning.

The switch will have to be reset manually, once the condition has been corrected.

16.6.4 Flame Control

This device will check for both pilot flame and main flame within the burner. When a flame signal from the pilot flame is available, it will allow the main gas valve to open.

All models use a flame rod to detect the flame (between 6 to 8 Vdc).

If a pilot flame is not present, the electrical signal cannot be sent and the pilot burner gas valve will close. The relay is equipped with a 10-second trial for ignition. If ignition does not occur, the flame safeguard relay will lockout, it will reset upon power restoration. (See the Trouble-Shooting Guide - *Page 79, Section 23*)

16.6.5 Discharge Temperature Sensor

This device senses the discharge temperature of the air at the blower. The discharge temperature sensor reports the discharge temperature to the temperature control amplifier which modulates the burner to the temperature set on the remote panel selector. Should this system fail, the manual high temperature limit switch will turn the burner off. BMS-ready air handlers do not come equipped with this sensor and must be field-supplied.

16.6.6 Positive Low Fire Start

This feature forces the burner to start in low fire rather than high fire during the air handler's start-up sequence of operations. The burner maintains its low fire setting for 10 seconds (as per timer setpoint) before it begins to modulate.

FIGURE 24: Interconect Wiring 1

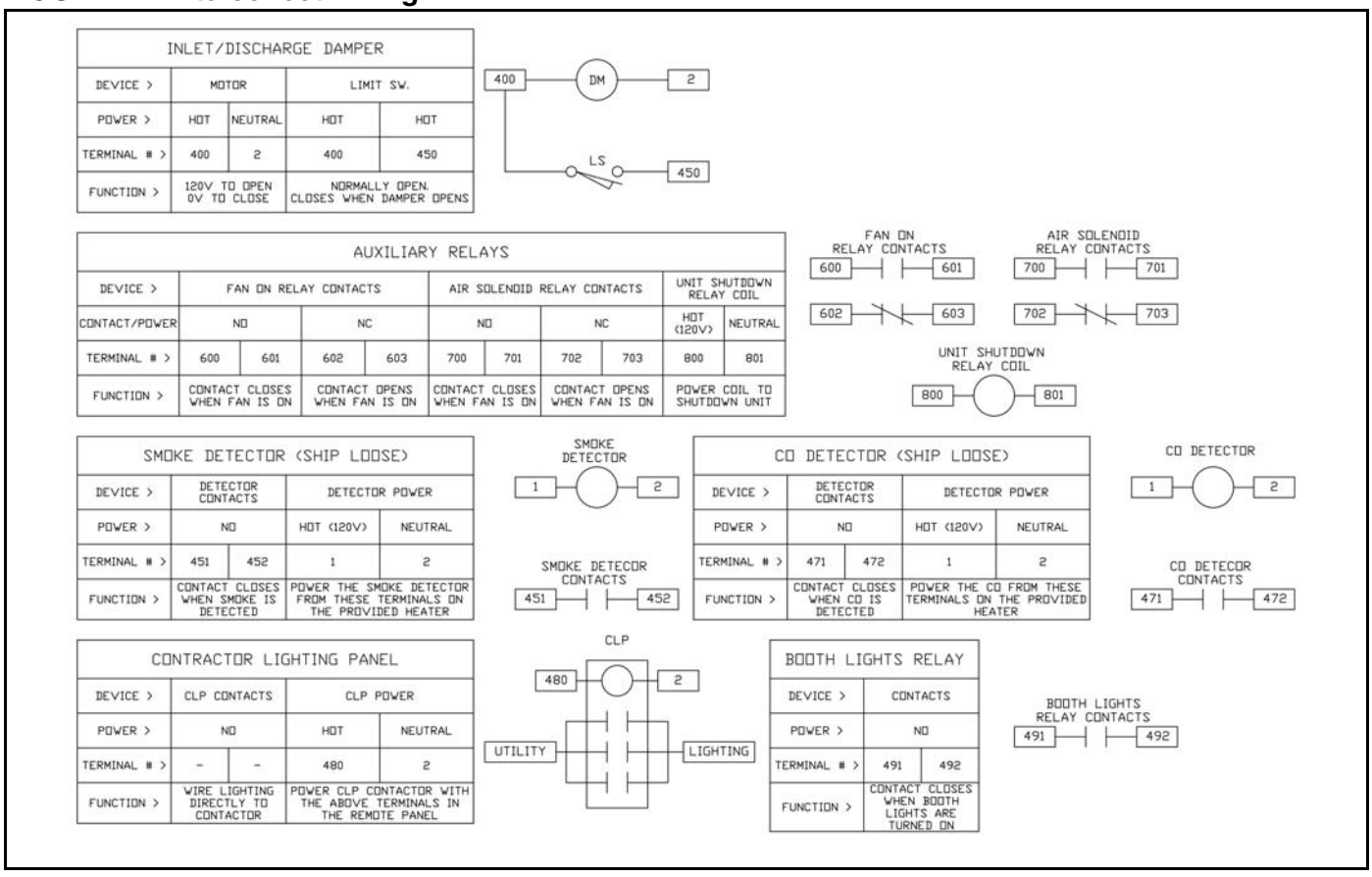

FIGURE 25: Interconect Wiring 2

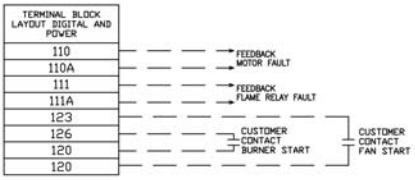

DIGITAL SIGNALS			
SIGNAL	WIRES	VOLTAGE	DESCRIPTION
FEEDBACK MOTOR FAULT	110, 110A	CUSTOMER DEPENDANT	FUNCTION: ALARM INDICATES WHEN THE MOTOR OVER CURRENT PROTECTION DEVICE TRIPS. CLOSED = FAULT OPEN = O.K
FEEDBACK FLAME RELAY FAULT	111, 111A	CUSTOMER DEPENDANT	FUNCTION: ALARM INDICATES WHEN A FLAME RELAY IS ACTIVE. CLOSED = FAULT OPEN = O.K
CUSTOMER CONTACT FAN START	120, 123	120 VAC	FUNCTION: FAN START CUSTOMER SUPPLIED DRY CONTACT TO START THE FAN. CLOSED = START OPEN = STOP
CUSTOMER CONTACT BURNER START	120, 126	120VAC	FUNCTION: BURNER START CUSTOMER SUPPLIED DRY CONTACT TO START THE BURNER. CLOSED = START OPEN = STOP

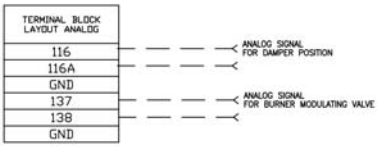

ANALOG SIGNALS			
SIGNAL	WIRES	VOLTAGE	DESCRIPTION
DAMPER POSITION	116, 116A	CAN BE CONFIGURED FOR 0-10V OR 4-20mA. DEPENDS ON DAMPER SIGNAL.	FUNCTION: FEEDBACK THIS IS THE SIGNAL FROM THE DAMPER TO INDICATE POSITION. 0v = 0% OPEN 10V = 100% OPEN 4mA = 0% OPEN 20mA = 100% OPEN
BURNER MODULATING	137, 138	CAN BE CONFIGURED FOR 0-10V OR 4-20mA. DEPENDS ON MODULATING VALVE SIGNAL.	FUNCTION: SIGNAL THIS IS THE SIGNAL TO THE MODULATING GAS VALVE. 0v = 0% OPEN, 10V = 100% OPEN 4mA = 0% OPEN, 20mA = 100% OPEN

16.7 Interlocks

16.7.1 Carbon Dioxide Interlocks

All air handlers that recirculate air from the heated space require either a control to limit the temperature rise in proportion to the amount of outdoor air or the use of a room carbon dioxide sensor. The carbon dioxide sensor is field provided and set to maintain a CO2 concentration below 5,000 ppm.

16.7.2 Carbon Monoxide Interlocks

Carbon Monoxide Detector is a ship loose sensor that monitors the CO levels in the space. It can either sound an alarm and/ or force the air handler into 100% outside air if its threshold set point is exceeded.

16.8 Control Options

16.8.1 Mild Weather Outside Air Stat

This option is designed to turn the burner off when the incoming outside air is at or above the temperature setpoint. The blower is allowed to run for continued ventilation. The mild weather outside air stat is located in the control enclosure. It has an adjustable setting between -20° F (-29° C) and 100° F (38° C).

16.8.2 Low Temperature Limit with Override Timer

This option is designed to turn the unit off when air is discharged below the temperature setpoint for a period in excess of timer setpoint. The low temperature limit switch is located in the air handler's control enclosure. The low temperature limit switch has an adjustable setting between -20° F (-29° C) and 100° F (38° C). The timer by-passes the low temperature limit switch for the first 5 minutes to allow the burner to establish a flame when the air handler is turned on. If the air handler's discharge temperature falls to the predetermined low temperature limit setpoint, after the 5 minute establishing period, the air handler's blower will be turned off. To reset the low temperature limit switch, set the fan switch to off and then on again. The air handler will return to the normal sequence of operations.

16.8.3 MUA / Exhaust Failsafe Interlock

This option incorporates the low temperature limit with override timer and an exhaust fan airflow switch monitor. The exhaust fan airflow switch is field provided and field wired as per the option sheet supplied with the unit. When the air handler is turned on there is a 5 minute establishing period for the low temperature limit switch and the exhaust fan interlock. If the air handler's discharge temperature falls to the predetermined low temperature limit setpoint, after the 5 minute establishing period, the air handler fan will be turned off. If there is a failure of the exhaust fan to activate the field supplied airflow switch, after the 5 minute establishing period, the air handler fan will be turned off. To reset the MUA/exhaust failsafe interlock, set the fan switch to off and then on again. The air handler will return to the normal sequence of operations.

16.8.4 Motorized Inlet Damper

The motorized inlet damper covers the outside air inlet of the air handler. When the air handler blower is turned on, the damper motor is energized and opens the damper. The damper motor has an auxiliary switch that prevents the blower from starting until that damper has opened sufficiently to allow the required air volume to pass through the air handler.

16.8.5 Motorized Discharge Damper

The motorized discharge damper is mounted in the duct downstream from the discharge opening of the air handler. When the air handler fan is turned on the damper motor is energized and opens the damper. The damper motor has an auxiliary switch that prevents the blower from starting until that damper has opened sufficiently to allow the required air volume to pass through the air handler.

16.8.6 Control Enclosure Heater

The control enclosure heater is an electric heater that keeps the temperature in the control enclosure within the range for the control components. This option is intended for extremely cold climates, but recommended for installations below 15° F (-9° C). The air handler controls are rated to perform at temperatures as low as -30° F (-34° C). In environments where the air handler may be exposed to lower temperatures, a control enclosure heater may be required.

16.8.7 Auxiliary Relay

An auxiliary relay may be added to an air handler for either an interlock or a customer defined purpose. Refer to the option sheet supplied with the air handler to indicate whether the relay is wired for an intended purpose or left unwired for a future interface. Each relay will be double pole double throw (DPDT) type. Maximum switching capacity on the normally open contact is 8A, and for the booth light relay, 15A.

16.8.8 Smoke Detector

A smoke detector interlock allows for the air handler to operate (either off or on) based on signal input from the fire alarm.

16.8.9 Single Point Connection

When a variable frequency drive or auxiliary motor starter (both used for controlling an exhaust fan) or an enclosure heater or ground fault interrupt (GFI) receptacle are ordered, the installer/service technician must bring in separate power wires and fused disconnect (provided by others) to power these options. The single point connection allows the installer/service technician to bring only one set of power wires into the air handler. Additional fusing is also provided to protect the variable frequency drive, enclosure heater, and/or GFI.

16.8.10 Service Receptacle Powered by Others (Wired)

This option provides a service receptacle. It includes ground-fault interrupter (GFI) receptacle mounted on the interior or exterior of the control enclosure. Power to the receptacle is supplied by the installer.

16.8.11 Room Override Stat

For use with Standard Discharge Control remote. This option provides additional thermostat capability based on room temperature. The thermostat senses room temperature, and resets the discharge air to a higher temperature whenever the temperature falls below settings indicated on the temperature selection dial (located on remote panel). Override temperature can be set 0° F to 40° F above the temperature selection dial on the remote panel.

SECTION 17: SEQUENCE OF OPERATION

⚠ DANGER

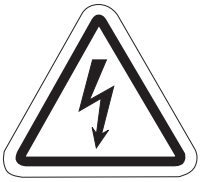

Electrical Shock Hazard

Disconnect electric before service.

More than one disconnect switch may be required to disconnect electric from equipment.

Equipment must be properly grounded.

Failure to follow these instructions can result in death or electrical shock.

⚠WARNING

Carbon Monoxide Hazard

Do not recirculate air from the heated space over burner.

Air supply to burner must be from outside.

Failure to follow these instructions can result in death or injury.

17.1 Air Handler Configuration

Based on the air handler application, the air handler may be configured in any of the four styles described in the upcoming sections. These configurations are available on all air handlers, except the 2005 which is only available in the MUA style. For a comparison of these configurations, *See Page 48, Table 11 and Page 48, Figure 26*.

17.1.1 Make-Up Air (MUA) Style

The MUA style air handler has a constant speed blower that is designed to deliver a constant volume of air to the heated space. This style air handler supplies 100% outside air to the heated space and is not capable of supplying return air.

17.1.2 Fixed Recirculation (FR) Style

The FR style air handler has a constant speed blower that is designed to deliver a constant volume of air to the heated space. In all cases, however, the air being delivered directly over the burner for combustion must always be 100% outside air. The air handler delivers 20% outside air and 80% of return air. The outside air is heated then mixed with the return air prior to being delivered to the heated space.

17.1.3 Air Management (AM) Style

The AM style air handler has a constant speed blower that is designed to deliver a constant volume of air to the heated space. A building pressure sensor is used to detect the differential pressure between the outside and the heated space. The total volume of air delivered by the air handler may at times consist of 0% to 80% return air. An automatic control is provided for the outdoor air and return air dampers. A null pressure switch is used to sense a positive space pressure (room or duct). This null pressure switch is mounted in the control enclosure. More or less outdoor air is brought into the space to satisfy the pressure setpoint. Most installations require a setpoint of 0.02 in wc to 0.03 in wc to achieve adequate pressure control in the building space. 5/16" diameter tubing connected to the positive pressure port of the switch must run to the inside of the building. 5/16" diameter tubing connected to the negative pressure port of the switch must run to the outside of the building.

17.1.4 Variable Air Volume (VAV) Style

The VAV style air handler uses a building pressure sensor to detect differential pressure between the outside and the heated space. The air handler will deliver 100% outside air and will not deliver return air. The air handler will ensure proper air velocity over the burner by using a photohelic air sensor to measure the pressure drop across the burner and by using a damper to modify the airflow when a pressure change is required. A second photohelic air pressure sensor is used to measure the differential pressure between the outside and the heated space. Most installations require a setpoint of 0.02 in wc to 0.03 in wc to achieve adequate pressure control in the building. The second pressure sensor is used to provide a control signal to the variable frequency drive that, in turn, controls the blower speed. 5/16" diameter tubing connected to the positive pressure port of the pressure sensor must run to the inside of the building. 5/16" diameter tubing connected to the negative pressure port of the pressure sensor must run to the outside of the building.

Table 11: Configuration Chart

Air Handler Configuration	Air Flow	Air Volume	Control
Make Up Air (MUA)	100% Outside Air	Constant	-
Fixed Recirculation (FR)	Non-adjustable ratio of 20% outside air and 80% return air	Constant	-
Air Management (AM)	Adjustable ratio of 20% outside air and 80% return air to 100% outside air and 0% return air	Constant	Building Pressure Controls Outside/ Return Air Ratio
Variable Air Volume (VAV)	100% Outside Air	Variable 50% - 100%	Building Pressure Controls Air Volume Requirement

FIGURE 26: Air Handler Styles

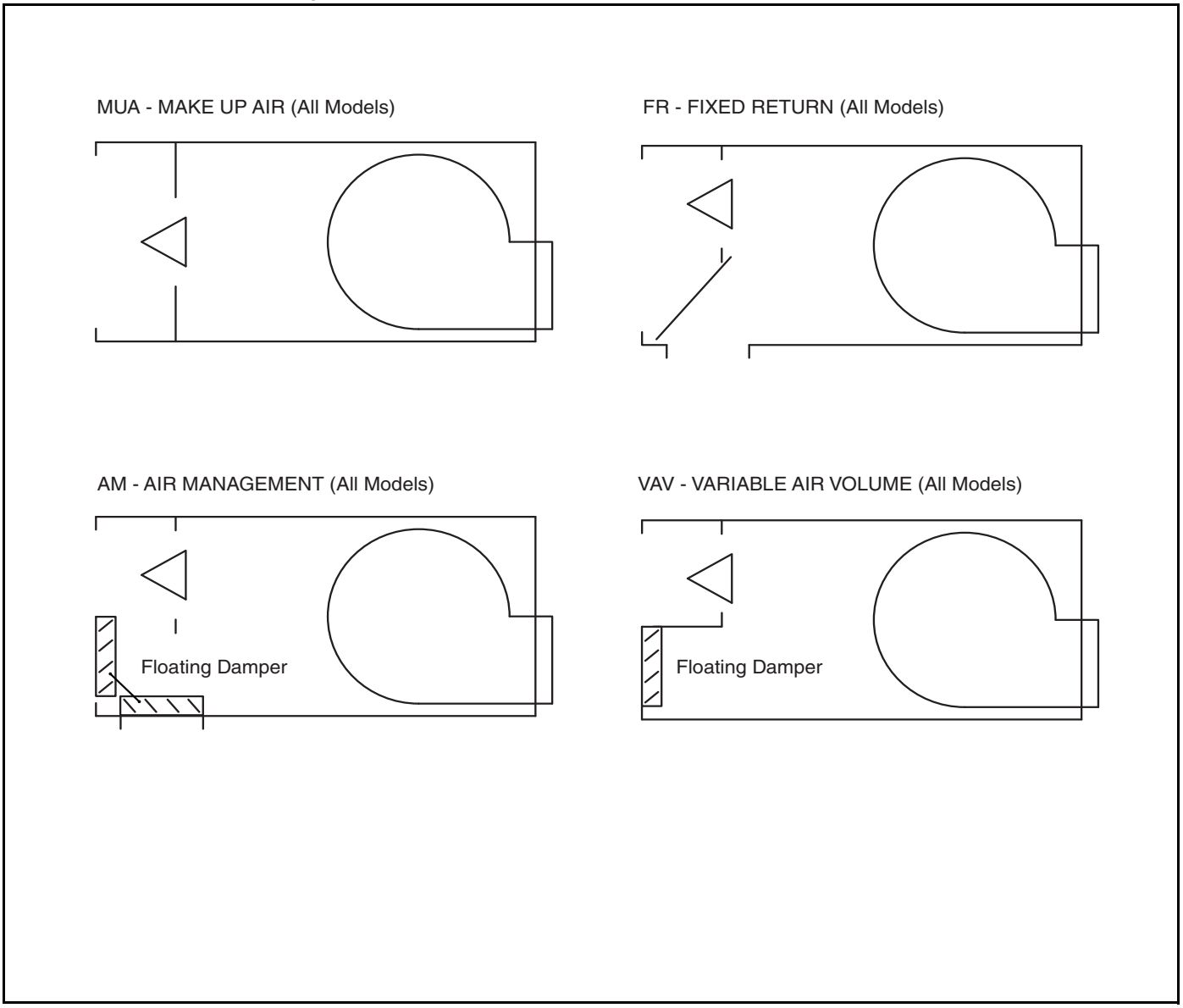

17.2 HVAC Remote Panels and Panel Options

The remote panel should be mounted in the conditioned space in a convenient location for controlling the air handler. Do not locate a remote panel that contains temperature sensing equipment in an area directly affected by the air handler or another heat source as it may interfere with the operation of the air handler.

17.2.1 Standard Discharge Control (SDC) Remote

This control is typically used for air handlers providing space heating. The burner flame modulates to maintain a constant discharge air temperature as selected on the temperature selection dial. While in "auto" mode, a space temperature thermostat controls the operation of the air handler to maintain the desired space temperature.

AUTO/WINTER Mode:

The air handler (blower and burner) cycle on and off to maintain space temperature as selected on the room thermostat. When the air handler is operating, air is being discharged at the setpoint on the discharge temperature selection dial. The burner flame modulates to maintain a constant discharge air temperature as selected on the temperature selection dial. The discharge air temperature setting must be higher than the thermostat setting.

ON/WINTER Mode:

The air handler (blower and burner) operate continuously to provide heated air. When the air handler is operating, air is being discharged at the setpoint on the discharge temperature selection dial. The burner flame modulates to maintain a constant discharge air temperature as selected on the temperature selection dial. The unit disregards the thermostat setpoint while in this mode.

ON/SUMMER Mode:

Only the blower operates continuously to provide unheated air. The burner remains off regardless of temperatures on the temperature selection dial and thermostat.

FAN ON indicator:

Indicates that the air handler is supplying power to the blower motor via the M1 motor starter.

BURNER ON indicator:

Indicates that the air handler has supplied power to open the main gas safety shut off valve.

BURNER LOCKOUT indicator:

The burner control module has experienced a fault and will need to be reset. The burner control module must be reset at the air handler. Refer to *Page 69, Section 21* and *Page 79, Section 23* to determine the cause of the fault.

CHECK FILTER indicator:

The airflow in the unit is insufficient to activate the low pressure switch. This is most commonly caused by dirty filters, but could also indicate other obstructions in the air stream.

17.2.2 Deluxe Temperature Control (DTC) Remote

This control is typically used for providing automatic day/night space heating. The burner flame modulates and varies the discharge air temperature to maintain the space temperature set on the

Selectrastat dial. The 7-day programmable touchscreen thermostat provides nighttime setback for unoccupied space heating.

AUTO/WINTER Mode:

Occupied time: Blower and burner cycle operate continuously to maintain a constant space temperature as selected on the Selectrastat dial. The burner flame fully modulates and varies the discharge air temperature to maintain the space temperature.

Unoccupied time: Blower and burner cycle on and off to maintain space temperature as selected on the touchscreen thermostat (night setback).

ON/WINTER Mode:

Blower and burner operate continuously to maintain a constant space temperature as selected on the Selectrastat dial. The burner flame modulates and varies the discharge air temperature to maintain the space temperature.

ON/SUMMER Mode:

Only the blower operates continuously to provide unheated air. The burner remains off regardless of temperatures on the temperature selection dial and thermostat.

FAN ON indicator:

Indicates that the air handler is supplying power to the blower motor via the M1 motor starter.

BURNER ON indicator:

Indicates that the air handler has supplied power to open the main gas safety shut off valve.

BURNER LOCKOUT indicator:

The burner control module has experienced a fault and will need to be reset. The burner control module must be reset at the air handler. Refer to *Page 69, Section 21* and *Page 79, Section 23* to determine the cause of the fault.

CHECK FILTER indicator:

The airflow in the air handler is insufficient to activate the low pressure switch. This is most commonly caused by dirty filters but could also indicate other obstructions in the air stream.

Table 12: Factory Preset Schedule on TH8110 Thermostat

	Monday - Friday			Saturday - Sunday		
	Time	**Temperature**	**Fan Setting**	**Time**	**Temperature**	**Fan Setting**
Wake	6:00 AM	68° F	Fan On	6:00 AM	62° F	Fan Auto
	The air handler will run continuously. Temperature controlled by Maxitrol stat.			The air handler will run when the thermostat calls for heat.		
Leave	Unused			Unused		
Return	Unused			Unused		
Sleep	5:00 PM	62° F	Fan Auto	5:00 PM	62° F	Fan Auto
	The air handler will run when the thermostat calls for heat.			The air handler will run when the thermostat calls for heat.		

17.2.3 BMS-Ready Control Option

The BMS-ready option provides inputs to receive control signals from a customer determined control system. Each BMS input is capable of receiving a 4-20mA or 0 - 10VDC from the control system. On all air handlers, the burner modulation will be controlled by the control system. For AM/VAV style air handlers, the control system can also control the modulating damper.

On DDC/BMS-ready systems, no temperature control amplifier is installed. Discharge temperature monitoring and modulation valve adjustment are completed by the customer supplied control system. For optimum efficiency, Rapid Engineering LLC suggests to limit the discharge temperature to 160 °F.

17.3 Basic Air Handler Sequence of Operation

While the control transformer is energized, the secondary side supplies 115 VAC to the control circuit. When the fan switch is in the "on" position, the M1 motor starter is energized and starts the blower motor. The M1 motor starter auxiliary contact supplies voltage to the burner switch and "Fan On" light. When the burner switch is in the "on"/"winter" position, power is supplied to the flame control module and the burner control circuit. The burner control circuit includes the high temperature limit switch and the low and high airflow pressure switches. Once the burner control circuit is satisfied, then the flame control module will execute the burner ignition sequence. Once the pilot flame is ignited and sensed by the UV scanner, the flame control module will open the safety shutoff valve to ignite the main flame. When the safety shutoff is opened, 115 VAC is applied to the "Burner On" light and T3 transformer, the secondary side supplies 24 VAC to the temperature control amplifier. The temperature control amplifier controls the modulating valve based on the discharge temperature monitor (and also the room temperature monitor, in the case of a DTC remote panel).

17.3.1 Flame Control

The flame control is a safety device and not serviceable. *See Pages 51 through 53* for detailed sequence of operation.

17.3.2 Fireye® M4RT1 Flame Safeguard

This control is located in the center of the main control panel. **To reset this flame relay, power to it must be shut off and turned back on.**

FIGURE 27: Fireye M4RT1

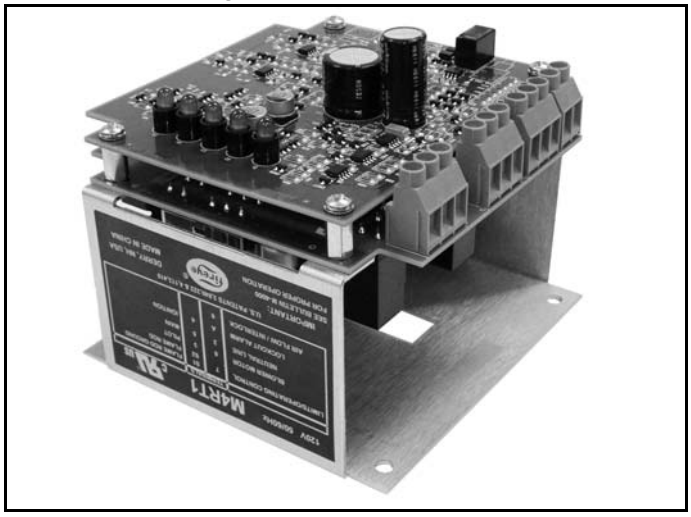

This is an exposed circuit board one piece control. It contains a fuse to protect itself from external shorts or overloads and on its exterior it has five lights which indicate the operating status of the control.

The functions of the indicator lights, which are located on the programmer module, are as follows. They are listed in the order you will find them on the flame safeguard and is also the order in which they will occur in the sequence. The indicators are actually a red colored light emitting diode or LED, this is how they will be referred to from now on.

1. **Operating Control** - This indicator is on when power is present at terminals #1 and #7 of the flame safeguard.

2. **Air Flow** - This indicator comes on at the same time as the one above. This is because the actual circuit is not used and is jumped out. It can be used as a troubleshooting guide, that power is present to terminals #6 and #8 in the flame safeguard.
3. **PTFI** - This acronym stands for Pilot Trial For Ignition. This indicator is on only during the trial for ignition period. It indicates that terminal #3 (pilot valve) and terminal #4 (ignition module), in the flame safeguard, have been turned on.
4. **Flame On** - This indicator comes on after the flame safeguard has proven out the flame signal. It also shows that the main valves have been activated in the equipment. On the safeguard control, terminal #5 is powered up.
5. **Alarm** - This indicates that a safety lockout has occurred, whether by loss of flame signal or failure to ignite.

17.3.2.1 Fireye® M4RT1 Flame Safeguard Operation (ANSI, FM < 2.5MBH and XL < 1MBH)

The following will describe the internal operation of a flame safeguard and the external functions that will take place. We will just trace the electromechanical steps and not the electronic network.

- All interlocks, control relays and safety limits are closed. Power is supplied to terminal #7 of the flame safeguard.
- The Operating Control LED illuminates.
- The electronic network is now powered up which illuminates the Air Flow LED.

NOTE: The airflow circuit of the safeguard control is not used and is jumped. This is why the Air Flow LED illuminates with the Operating Control LED.

- Following a short time delay period (purge cycle) determined by the jumpers, *See Page 53, Figure 28 and Page 53, Table 13*. The electronic network closes a contact that powers up terminal #3 and terminal #4 in the safeguard control.
- Terminal #3 powers up the equipment's pilot gas solenoid valve which opens allowing gas to flow.
- Terminal #4 powers up the ignition module creating the spark at the burner.
- This lasts for 10 seconds. This cycle is called trial for ignition. During this time period, the PTFI LED is illuminated.
- When the flame sensor detects a pilot flame, the signal is sent back to the safeguard control. The electronic network illuminates the FLAME LED.
- It closes a contact, which powers up terminal #5 in the control. This terminal powers up the main gas valves allowing the main burner to come on.
- At the same time the electronic network opens a contact which removes power from terminal #4. This shuts off the power to the ignition module, which stops the spark at the burner. The safeguard control at this point monitors the flame.

NOTE: If a pilot flame is not detected during the 10 second trial for ignition, the pilot gas solenoid valve and the ignition module are turned off. A safety lockout occurs which shuts down the electronic network. The only LED that will be illuminated at this time will be the OPERATING CONTROL. 30 seconds after the lockout occurs, the alarm circuit is powered up, illuminating the ALARM LED. Manual reset is now required. Wait 10 seconds before resetting the control to allow the lockout switch to cool down.

NOTE: If the flame signal is lost while the burner is on, the ignition module will be turned back on. A 10-second re-light trial for ignition is started. The PTFI LED will illuminate during this time.If a flame signal is detected, the main gas valves will turn back on and the ignition module will turn off. If a flame is not detected during this re-light trial, the pilot gas solenoid valve and ignition module will shut off. A safety lockout occurs which shuts down the electronic network. The only LED that will be illuminated at this time will be the OPERATING CONTROL. Thirty seconds after the alarm lockout happens the alarm circuit is powered up, illuminating the ALARM LED. Manual reset is now required. Wait 10 seconds before resetting the control to allow the lockout switch to cool down.

17.3.2.2 Fireye® M4RT1 Flame Safeguard (FM ≥ 2.5MBH and XL ≥ 1MBH)

If the equipment is ordered with a FM compliant Manifold equal or over 2.5M BTU or XL compliant equal to or over 1M BTU, certain sequences must be provided in the flame safeguard control. There is a specified time for pre-purge, trial for ignition, and non recycle.

1. **Timed pre-purge**
   This must be a separate purge from the rest of

the system. The trial for ignition must be delayed by 7 seconds while the blower in the unit is running. This is to guarantee that there are no combustible gases or vapors present in the air stream during burner ignition and light off.

2. **Trial for ignition**
   The length of time must be fixed at 10 seconds. This is to prevent the ignition module from continuing activating the spark electrode if a hazardous malfunction takes place.
3. **Non recycle**
   This feature prevents the flame safeguard control from trying to re-light the burner if it should fail during the ignition cycle or firing cycle. Instead it goes directly to a lockout condition and the flame safeguard will need to be manually reset.

The M4RT1 has a series of 8 jumpers that are used to configure the Purge timing, Pilot Trial for Ignition (PTFI) timing, and recycle or non-recycle operation. *See Page 53, Figure 28*.

Purge Timing

- Jumpers JP1 through JP5 are used to select the purge timing for the M4RT1. The available purge timing selections are 5, 7, 30, 60, and 240 seconds and any additive combination of those times. Selecting two or more purge timing jumpers will result in a purge time period equal to the sum of the jumpers selected. Selection of a purge time is accomplished by cutting or not installing the associated jumper. The factory set, default purge time of 5 seconds (JP1 not installed) is always selected. *See Page 53, Table 13* lists all available purge times and how to select those by cutting jumpers JP2 through JP5.

FIGURE 28: Jumper Locations

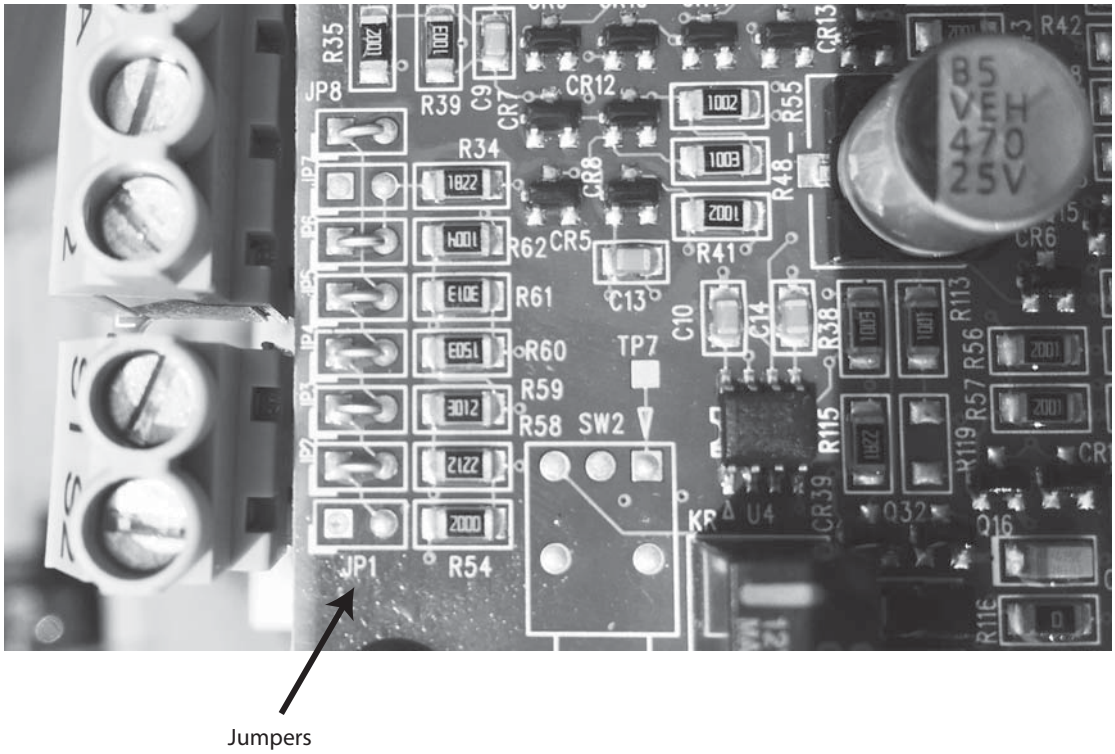

Table 13: Jumper Settings

Purge Time (seconds)	JP2	JPS	JP4	JP5
5	Installed	Installed	Installed	Installed
12	Cut	Installed	Installed	Installed
35	Installed	Cut	Installed	Installed
42	Cut	Cut	Installed	Installed
65	Installed	Installed	Cut	Installed

Pilot Trial for Ignition

- Jumpers JP6 and JP7 are used by the factory only to select the PTFI for the M4RT1. The factory set, default PTFI time is 10 seconds (JP6 installed, JP7 not installed). The PTFI time may only be set by the factory.

Recycle/Non-recycle Operation

- Jumper JP8 is used to select either Recycle or Non-Recycle operation of the M4RT1. The factory set, default is Recycle operation (JP8 installed). To select Non-Recycle operation, cut jumper JP8.

17.3.2.3 Fireye® M4RT1 Flame Safeguard Operation (FM ≥ 2.5MBH and XL ≥ 1MBH)

The following will describe the internal operation of a flame safeguard control (that has had its jumpers changed to comply with the agency requirements) and the external functions that will take place. Refer to the drawing below to follow the steps. We will just trace the electromechanical steps and not the electronic network.

- All interlocks, control relays and safety limits are closed. Power is supplied to terminal #7 of the flame safeguard.
- The Operating Control LED illuminates.
- The electronic network is now powered up which illuminates the Air Flow LED.
- Following a time delay period (purge cycle) 7 seconds. The electronic network closes a contact that powers up terminal #3 and terminal #4 in the safeguard control.
- Terminal #3 powers up the equipment's pilot gas solenoid valve which opens allowing gas to flow.
- Terminal #4 powers up the ignition module creating the spark at the burner.
- This lasts for 10 seconds. This cycle is called trial for ignition. During this time period, the PTFI LED is illuminated.
- When the flame sensor detects a pilot flame, the signal is sent back to the safeguard control. The electronic network illuminates the FLAME LED.
- It closes an internal contact, which powers up terminal #5 in the control. This terminal powers up the main gas valves allowing the main burner to come on.
- At the same time that the contact in step b closes, the electronic network opens a contact, which powers terminal #4. This shuts off the power to the ignition module, which stops the spark at the burner. The safeguard control at this point monitors the flame.

NOTE: If a pilot flame is not detected during the 10 second trial for ignition, the pilot gas solenoid valve and the ignition module are turned off. A safety lockout occurs which shuts down the electronic network. The only LED that will be illuminated at this time will be the OPERATING CONTROL. 30 seconds after the lockout has activated, the alarm circuit is powered up, illuminating the ALARM LED. Manual reset is now required. Wait 10 seconds before resetting the control to allow the lockout switch to cool down.

SECTION 18: DIRECT FIRED BURNER

⚠DANGER	⚠WARNING		
Electrical Shock Hazard **Disconnect electric before service.** **More than one disconnect switch may be required to disconnect electric from heater.** **Heater must be connected to a properly grounded electrical source.**	**Explosion Hazard** **Leak test all components of gas piping before operation.** **Gas can leak if piping is not installed properly.** **Do not high pressure test gas piping with equipment connected.**	**Carbon Monoxide Hazard** **Heaters installed unvented must be interlocked with sufficient building exhaust.** **Heaters must be installed according to the installation manual.**	**Burn Hazard** **Allow heater to cool before service.** **Tubing may still be hot after operation.**
Failure to follow these instructions can result in death, electric shock, injury or property damage.			

Manufactured by Midco International®, Inc., the HMA-2A is used for natural gas and propane (LP). The burner combines the two main ingredients needed for proper combustion air (oxygen) and fuel (gas whether natural or manufactured). In this burner raw gas is delivered to the burner ports at low pressure. The air passing across the burner is maintained between 2,500 and 3,200 feet per minute. The arrangement and shape of the air holes in the baffles that surround the burner provide the proper amount of air for proper combustion for all of the firing rates.

FIGURE 29: Midco HMA-2A Burner

18.1 Direct Fired Burner Ignition

The burner that is used in the Rapid Engineering LLC unit is equipped with a pilot assembly. The pilot assembly consists of a pilot gas tube, spark electrode or rod and a flame rod with grounding assembly. For proper ignition the spark rod must be adjusted correctly. A high voltage arc is generated between the spark rod and the pilot gas tube. The gas flowing out the ports in the pilot gas tube is ignited by this arc. The arc will be a brilliant electric blue in color. *See Page 56, Figure 29*.

FIGURE 30: Spark Rod Dimensions

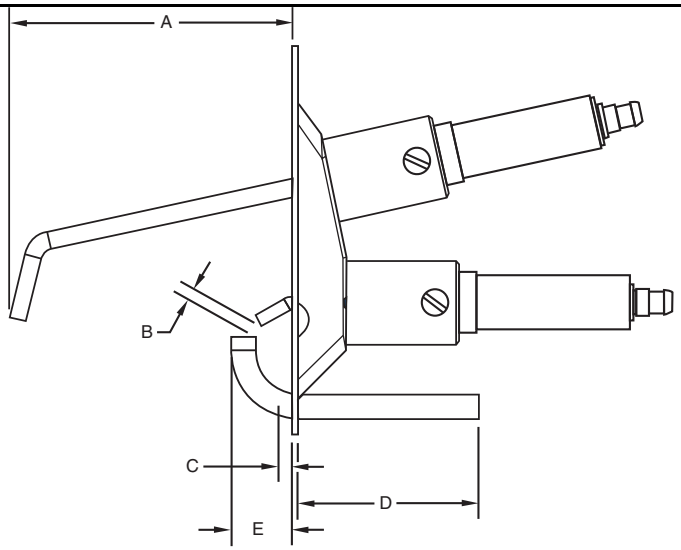

	A	B	C	D	E
in	2.940	0.125	0.125	1.881	0.633
cm	7.468	0.318	0.318	4.778	1.608

WARNING: the ignition system on the air handler generates between 6,000 to 10,000 volts.

The gas supplied to the pilot gas tube should be 3 1/ 2" wc for natural gas and between 9 to 11" wc for propane or LP. The difference between the two fuels is that a restricting orifice is installed in the propane or LP pilot gas tube. The pilot assembly can be used on propane or LP without an orifice, if this is the case then the pressure for LP is 2.0"w.c. Ignition will take place with the introduction of gas to the pilot gas tube. The pilot flame will be mostly blue in color with streaks of yellow. The flame size will be roughly 2" in diameter. The flame must be steady and consistent in size.

18.2 Direct Fired Burner Flame Proving (Flame Rod)

The flame rod in the burner is constructed of a material that produces a signal when heated. This signal is measured as a direct current micro amp. The path of the signal is from the flame rod to the burner. From the burner, which is mechanically grounded to the unit casing, the signal continues to the grounded side of the flame rectification module in the flame safeguard control. The signal continues out of the module to the flame rod where it completes the loop. The length the flame rod extends into the burner is determined by, the insulator surrounding the rod. This insulator must not be exposed more than 1/8" into the burner and not recessed more than 1/8". At this setting the flame rod will be enveloped by the pilot or main flame. It will be glowing bright red along at least 50% of its length. *See Page 56, Figure 30*.

NOTE: For the flame rod to produce this signal its position in relation to the grounding rod, pilot and main flame is critical.

The flame rectification module of the flame safeguard control converts this signal to a D.C. voltage. This voltage is the value that is used to monitor the pilot and the main flame of the burner. For the flame safeguard control to recognize this signal the value of the voltage must be between 6 to 18 volts D.C. and it must be steady. This signal is measured at the flame relay, on the rectification module's test jacks; S1 (colored red) and S2 (colored black). Upon receiving the correct signal, the flame relay will accept this as proof that the burner is functioning correctly and will proceed with its functions.

SECTION 19: DIRECT FIRED PROCESS AIR HEATERS

⚠ DANGER

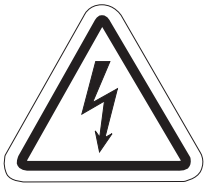	
Electrical Shock Hazard	**Severe Injury Hazard**
Disconnect electric before service. **More than one disconnect switch may be required to disconnect electric from equipment.** **Equipment must be properly grounded.**	**Do not enter equipment while in operation.** **Equipment may start automatically.** **Do not operate with door open.** **Installation, operation and service must be done by a trained technician only.**
Failure to follow these instructions can result in death, electrical shock or injury.	

⚠ WARNING

Explosion Hazard	**Carbon Monoxide Hazard**	**Falling Hazard**	**Burn Hazard**
Leak test all components of equipment gas piping before operation. **Gas can leak if piping is not installed properly.** **Do not high pressure test gas piping with equipment connected.**	**Do not recirculate air from the heated space over burner.** **Air supply to burner must be from outside.**	**Use proper safety equipment and practices to avoid falling.** **Do not use any part of equipment as support.**	**Allow equipment to cool before service.** **Internal components of equipment may still be hot after operation.**
Failure to follow these instructions can result in death, injury or property damage.			

This section applies to direct gas-fired process air heaters of the recirculating or non-recirculating type. During the process heating cycle (bake or cure) excess Carbon Monoxide is produced and all entry into the controlled space is prohibited. Exhaust systems must be provided for proper operation and no entry is allowed into the space during the high temperature or baking cycle. This equipment is to provide process heating to non-occupied spaces and may also include operation as a non-recirculating ventilation air heater. This heater may or may not be used in a paint booth application.

The intent of this section is to supply the required information concerning installation and operation of

the process air heater in compliance with:

United States: Refer to NFPA 86 - latest revision, Ovens and Furnaces /ANSI Z83.25 - latest revision, Direct Gas-Fired Process Air Heaters.

Canada: Refer to CSA 3.19 - latest revision, Direct Gas-Fired Process Air Heaters.

19.1 Direct Fired Process Air Heater Models

- 100% Outside Air - Ventilating and Bake Cycle Mode
- 100% Outside Air - Ventilating with Reduced Airflow for Bake Cycle Mode
- 100% Outside Air - Ventilating with Recirculation for Baking Cycle Model (80% Recirculated Air after the burner and 20% Outside Air)
- 100% Outside Air - Ventilating with Recirculation for Baking Cycle Model (90% Recirculated Air across the burner and 10% Outside Air)

Other terms may be used to describe the bake cycle mode such as; Cure or Cure Time Cycle, Dry or Drying Cycle, and Flash Kick Cycle. Ventilation air and the term outside air are also used interchangeably.

All process heaters come equipped with two High Limit discharge controllers, one for the ventilation cycle - maximum 160 °F (71 °C) (automatic reset) and one for the bake cycle mode - maximum 300 °F (149 °C) (manual reset). The discharge temperature controller limits the temperature to a maximum 250 °F (121 °C).

19.2 Installer's Responsibilities

1. All access opening(s) to the heated space, served by the Process Heater that can be used by personnel to enter the space, must have door interlock switch or switches to shut down the Process Heater if in the bake cycle.
2. On recirculation Process Heaters, the return air duct from the served space must have filters installed to prevent particulate matter from entering the heater. If not supplied by the Process Heater, then the installer must supply them. These filters must be approved by the authority having jurisdiction of the installation.
3. The return air duct system must be installed with doors, panels or other means for access to facilitate inspection, maintenance, cleaning and access to fire protection devices.
4. Instructions must be provided to require periodic inspection and cleaning of the recirculation air duct. The installer must supply this information.
5. The gas piping installer must locate a manual emergency gas shutoff valve in an appropriate location that allows access to shut off the flow of gas to the Process Heater in case of an emergency.
6. If a post purge (cool-down) cycle is not supplied with the Process Heater, then the installer must supply a timing circuit that allows 100% ventilation air of the space to cool the products down and purge any airborne contaminants.
7. It is also suggested that the following Burn Hazard Warning be installed at all access opening(s) to the heated space, served by the Process Heater that can be used by personnel to enter the space. *See Page 60, Figure 31*.

FIGURE 31: Burn Hazard

⚠ WARNING

Burn Hazard

Allow equipment to cool before service.

Internal components of equipment may still be hot after operation.

Failure to follow these instructions can result in injury.

8. The space serviced by the Process Heater, during the bake cycle mode must have its lighting turned off. If not supplied by the process heater, then the installer must electrically interlock the facility lights with the bake cycle.
9. Process Heaters in the baking cycle mode require a minimum of 200 CFM of ventilation air per 1000 CFH of fuel gas for proper combustion. If the Process Heater does not come equipped with the features to meet this requirement, then the installer must provide the method to accomplish it.

NOTE: Process Heaters supplied by Rapid Engineering LLC are available with the options required to satisfy this requirement.

A. Reduced Airflow Process Heaters

- Variable Frequency Drive control of the Process Heater's airflow.

B. 90/10 Recirculation Process Heaters

- The installer must ensure that the Outside Air Damper, when supplied by Rapid Engineering LLC, is set to provide proper airflow for combustion and to make sure the recirculation air is properly diluted during the bake cycle mode. This is accomplished by ensuring the bypass feature of the ventilating air damper is not blocked by the installation or that the minimum position control of the ventilating air damper is functioning properly.

19.3 Installer's Responsibility for Process Heaters Connected to Paint Booths

1. If the exhaust control system is not supplied by the Process Heater, then the installer must electrically interlock the exhaust system with the heater.
2. If a purge cycle between ventilation cycle mode and the bake cycle mode is not supplied with the Process Heater, then the installer must supply a purge timer that delays the bake cycle from operating for a minimum of 3 minutes or at least 4 air changes of the space.
3. The space serviced by the Process Heater, during the purging cycle and bake cycle mode must have all spray equipment turned off. If not supplied by the Process Heater, then the installer must electrically interlock the spray equipment with the Process Heater.

SECTION 20: START-UP PROCEDURES

⚠ DANGER	
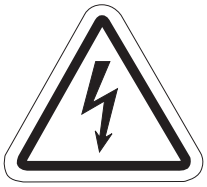	
Electrical Shock Hazard **Disconnect electric before service.** **More than one disconnect switch may be required to disconnect electric from equipment.** **Equipment must be properly grounded.**	**Severe Injury Hazard** **Do not enter equipment while in operation.** **Equipment may start automatically.** **Do not operate with door open.** **Installation, operation and service must be done by a trained technician only.**
Failure to follow these instructions can result in death, electrical shock or injury.	

⚠ WARNING			
Explosion Hazard **Leak test all components of equipment gas piping before operation.** **Gas can leak if piping is not installed properly.** **Do not high pressure test gas piping with equipment connected.**	**Carbon Monoxide Hazard** **Do not recirculate air from the heated space over burner.** **Air supply to burner must be from outside.**	**Falling Hazard** **Use proper safety equipment and practices to avoid falling.** **Do not use any part of equipment as support.**	**Burn Hazard** **Allow equipment to cool before service.** **Internal components of equipment may still be hot after operation.**
Failure to follow these instructions can result in death, injury or property damage.			

Installation Code and Annual Inspections:
All installation and service of RAPID® equipment must be performed by a contractor qualified in the installation and service of equipment sold and supplied by Rapid Engineering LLC and conform to all requirements set forth in the RAPID® manuals and all applicable governmental authorities pertaining to the installation, service, labeling and operation of the equipment.
To help facilitate optimum performance and safety, Rapid Engineering LLC recommends that a qualified contractor conduct, at a minimum, annual inspections of your RAPID® equipment and perform service where necessary, using only replacement parts sold and supplied by Rapid Engineering LLC.

Check installation site to ensure all codes and engineering specifications are correct. This section of the manual is intended to be used as an instructional guide to the commissioning of the direct fired air handler. Fill out the start up sheet located at the back of the manual as each step of the procedure is performed. This procedure must be completed by the commissioning contractor and returned to Rapid Engineering LLC. If the document is not returned, the manufacturing date will be used as the warranty start date.
All components have been checked at initial factory startup. During transit components may have loosened/shifted, check all wiring before initial startup.

20.1 Installation of Recirculating Air Handler

Every direct-fired air handler which recirculates room air (i.e., AM and FR styles) must utilize either a control system which limits temperature rise in proportion to the amount of outdoor air, or a room carbon dioxide sensor, installed per the manufacturer's recommendations. The normally-closed contacts of this sensor must be wired in as per the CO_2 interlock diagram, maintaining the room concentration of CO_2 below 5,000 ppm. Select the CO_2 interlock diagram based on air handler configuration and model. *See Page 43, Figure 24*.

With the AM and VAV package, a temperature rise limiting resistor comes prewired. When the air handler goes into full recirculation, the resistor is activated, lowering the maximum temperature rise to comply with government standards. For the FR package, the gas valve is preset to the proper temperature rise. *See Page 66, Table 18*.

20.2 Mechanical

This piece of equipment requires at least 4 CFM (6.8m³/h) of outside air per 1,000 Btu/h (0.293 kW).

Before installation, check that the local distribution condition, nature of gas and pressure, and the current state of adjustment of the equipment are compatible.

If filters are not installed (via inlet hood or filter section), an air strainer must be installed on the inlet of the air handler with openings less than or equal to 5/8" (16 mm) in diameter.

Air inlets must be installed with the lowest edge 19" (500 mm) above any surface. This applies to roof curbs, upright stands and suspended air handlers.

20.2.1 Sheave Alignment

Sheaves are factory aligned. On all air handlers, check sheave alignment as follows.

1. Attach a string to the vertical surface next to the blower shaft bearing. (*See Page 62, Figure 32*)
2. Wrap the string around the blower sheave and across both sheave surfaces as shown.
3. Adjust until all four contact points (triangle) touch the sheave surfaces. "IN" or "OUT" adjustment of the motor sheave and/or motor adjustment may be required.
4. Pull the string away from the motor sheave and then move it slowly back towards the sheave, making sure the string remains straight while touching all contact points.
5. Remove string before turning air handler on.

FIGURE 32: Sheave Alignment

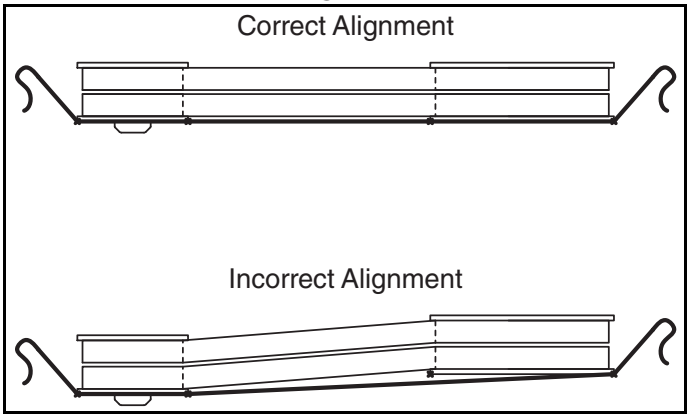

20.2.2 Belt Tension

- Belt tension should be checked with a belt-tension gauge when one is available. Follow the belt tension gauge instructions.
- When a tension gauge is not available, measure the belt span of the belts (*See Page 63, Figure 33*).
- Allow for 1/64" (0.40 cm) of deflection for each inch of center distance length for the charted pounds of force. Check *Page 63, Table 14* for proper deflection force.
    - EXAMPLE: A 40" (101.6 cm) shaft center distance would dictate 40"/64" or 5/8" (1.59 cm) of deflection. With a standard B-belt and a motor sheave measuring between 5.8" (14.7 cm) and 8.6" (21.84 cm), the belt will have proper tension if a 5/8" deflection can be achieved with a minimum of 6-3/8 lbs. and a maximum of 8-3/4 lbs. of pressure as measured with a belt tensioning gauge.

FIGURE 33: Belt Tension

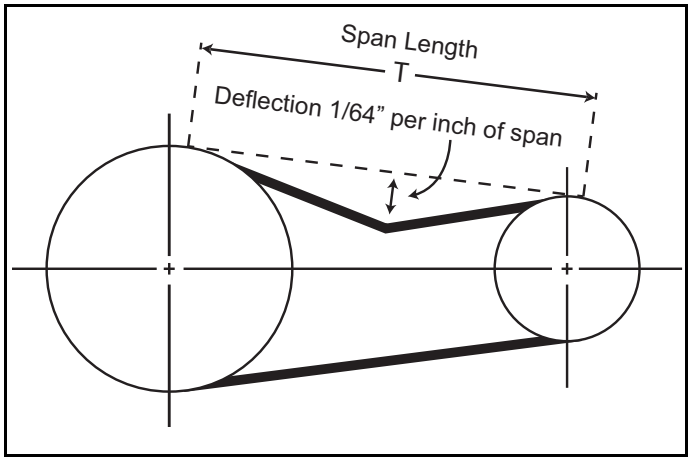

Table 14: Deflection Force B and BX Belts (in lbs)

Belt Cross-Section	Motor Sheave Dimension Range in - cm	TYPE B		TYPE B-X (High HP)	
		Min.	Max.	Min.	Max.
B	3.4-4.2	4	5 1/2	5 3/4	8
	4.4-5.6	5 1/8	7 1/8	6 1/2	9 1/8
	5.8-8.6	6 3/8	8 3/4	7 3/8	10 1/8

NOTE: If drive belts squeal during start-up, increase belt tension to the highest allowed value. Re-check tension during each inspection. See Page 69, Section 21 for additional information.

20.2.3 Air Temperature Sensing

The sensing probe is factory mounted in the blower housing (Not included if customer orders BMS-ready).

20.3 Electrical

1. Check motor starter for proper overload settings. The overload setting should meet full load amps (FLA) of motor.
2. Measure the supply voltage with the air handler off and then on. For a system that is powered with three phase power, measure the voltage of each phase.
3. Verify correct blower rotation.
4. While the blower is running and the burner is off, measure the total system current draw with an ammeter. Measure the system current draw again after the burner adjustments are made and with the burner and blower both on.
5. If applicable, compare all variable frequency drive (VFD) programming parameters with specifications provided on electrical drawing.

20.4 Airflow

The air flow switches are factory calibrated safety devices for burner air flow. If an air flow switch does not close, the problem may not be the air flow switch. It could be an indication of an air flow problem (incorrect blower rotation, duct restrictions, etc.).

20.4.1 Differential Pressure

In order to verify proper airflow across the burner, the differential pressure across the profile plate needs to be measured. Attach a manometer to the pressure test ports where the pressure switch is attached and measure the differential pressure with a manometer. This reading must be 0.9 in wc +/- 0.1 in wc. (2.24 mbar +/- 0.25 mbar)

To adjust the differential pressure that was measured in the step above, use the adjustable sheave. To decrease the speed of the blower and the differential pressure, turn the adjustable half of the sheave outward (decrease diameter). To increase the speed of the blower and the differential pressure measured at the burner, rotate the adjustable half of the sheave inward (increase diameter). Both sides of the sheave must be turned equal, multiple grooves must be adjusted equal.

After any adjustment, it is necessary to re-check the alignment, belt tensions and verify that all sheave set screws are tightened to the specified torque value before engaging the blower. *See Page 64, Table 15 and Table 16*. Typically, all sheaves have two set screws to secure the sheave to the motor shaft. Some sheaves may be press fit onto the motor shaft. On the two belt sheaves, there are four setscrews that hold the size adjustment. On the single belt sheaves, there are two set screws to hold the size

adjustment.

Table 15: Motor Sheave Drive Torque Specifications

Setscrew Size	Allen Wrench	Torque Settings	
		in•Lbs	ft•Lbs
1/4"	1/8"	87	7.3
5/16"	5/32"	120	10.0
3/8"	3/16"	290	24.2

Table 16: Motor and Blower Bushing Torque Specifications

Bolt Size (on Bushing)	Torque Settings	
	in•Lbs	ft•Lbs
#10	60	5
1/4"	108	9
5/16"	192	16
3/8"	360	30
1/2"	720	60

20.4.2 Burner Pressure

1. A pressure tap is used to measure differential at the burner and to set high fire gas pressure. On air handlers equipped with a M611 modulating valve (Model 2005), the pressure tap is located on a tee between the M611 valve and the burner. *See Page 39, Figure 22 and Page 68, Figure 37*. On air handlers equipped with the MR212 modulating valve (Models 2010 - 2030), the pressure tap could be located on the downstream side of the MR212 valve, on a T-fitting coming off the outlet pressure tap on the MR212 valve or between the MR212 valve and the burner. *See Page 39, Figure 23 and Page 67, Figure 35*.
2. Measure the burner pressure with the inlet manual gas valve off.
   - Open the manual shut off located between the modulating valve and the burner.
   - Turn the blower on and record the negative pressure on a u-tube manometer or gas pressure gauge. This reading is used for high fire burner pressure adjustment.
3. After taking the burner pressure reading, temporarily leave the manometer attached to the 1/8" tap. It will be used later to check high fire gas pressure.

20.5 Gas Piping and Initial Pressure Settings

1. Perform a pressure test on all gas supply lines to the air handler per applicable codes. **Make sure to isolate all gas controls before pressure testing the system.**
2. Verify supply pressure does not exceed maximum rated gas pressure as stated on the rating plate.
3. Set the supply gas pressure at the step down regulator (normally outside of the enclosure if one is installed) according to the nameplate rating inlet gas pressure specifications.
4. Only after performing steps 1-3 (above), verify pilot pressure.
   - Place a u-tube manometer or gas pressure gauge on the tee at the downstream side of the pilot pressure regulator.
   - Open the main gas valve and close the gas valve downstream of the MR valve.
   - Set the burner switch to "on" and adjust the pilot pressure regulator to 1.0 in wc for natural gas or 0.5 in wc for LPG.
   - Verify that the burner flame control has a flame signal of 6-8 Vdc. *See Page 64, Figure 34*.

FIGURE 34: Fireye Flame Module

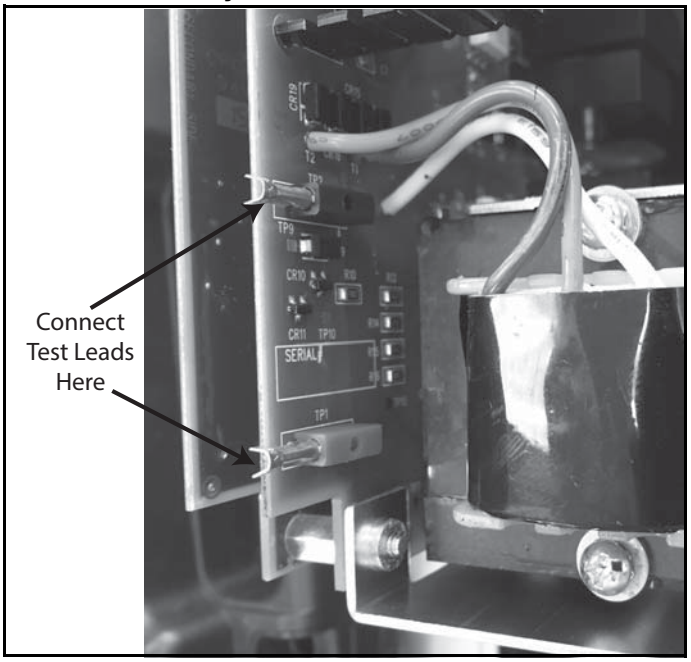

5. Adjust air handler high fire gas pressure.
   - Determine the high fire gas pressure by adding the manifold pressure for maximum input (from the rating plate) and the burner negative pressure (from the measurement made in the burner pressure section of this procedure). Record this value for use in adjustment step.

For example:

Differential pressure= -1.0 in wc

Maximum manifold pressure (from rating plate)= 2.0 in wc

High fire gas pressure= 2.0 + (-1.0) in wc

High fire gas pressure= 1.0 in wc

   - Force the burner into high fire. Refer to the burner mode setting chart *on Page 65, Table 17*, for the specific amplifier and action
   - Set the pressure at the burner side of the modulating valve to the calculated value (from the begining of this step), by removing high fire adjustment cap and rotating the regulator adjustment screw. A clockwise rotation increases manifold pressure. Temperature rise should not exceed maximum as listed *on Page 66, Table 18*. For under a million BTU input, the high fire gas pressure is set by adjusting the regulator upstream of the M611 valve. *See Page 68, Figure 37*.
   - Reconnect any wires that were used for adjustment.
6. Adjust recirculating mode or reduced air volume high fire gas pressure
   - This adjustment is required for and only applies to AM and VAV style units.
   - Force the unit into high fire and maximum recirculation for AM style or minimum air volume for VAV style. Refer to the burner mode setting chart *on Page 65, Table 17* for specific amplifier and action required to place it into high fire.
   - Measure the recirculation temperature rise and compare it to *Page 66, Table 18*.
   - The resistor on the reduced flow switch (mounted inside the control enclosure) may need adjustment until recirculation temperature rise is obtained.
   - Return unit to normal operating conditions.
   - Reconnect any wires that were removed for adjustment.
7. Maximum discharge temperature is 160° F (71° C) for models approved to Z83.4 and Z83.18 (see ETL Standard). For models approved Z83.25 (see ETL Standard), the maximum discharge temperature is 200° F (93° C).
8. Low fire adjustment
   - **NOTE:** High fire gas pressure must be set BEFORE adjusting low fire. There are three critical items to consider before adjusting low fire:
     A. Low fire adjustment does not regulate gas pressure.
     B. If the low fire adjustment screw is set to maximum, high fire regulation problems will occur.
     C. The burner control system must be forced into low fire per the "Burner Mode by Amplifier Type" table. *See Page 65, Table 17*.
   - Low fire is set at the MR212 valve using the adjustment screw under the low fire adjustment cap screw (loosen locking screw before adjustment), *See Page 67, Figure 35*, or on the M611 valve using the brass adjusting screw on the front side, *See Page 68, Figure 36*. The burner must be forced into low fire first. Then rotate the adjustment screw until there is a continuous blue ribbon across the entire burner. A counter clockwise rotation increases the flame size. Low fire temperature rise must not exceed 12° F (7° C). Tighten locking screw when finished.
   - Reconnect any wires that were removed for adjustment.
9. Once gas pressure and high/low fire adjustments are made, the gas setup is completed. All taps and instruments must be removed and all caps and plugs must be replaced.

Table 17: Burner Mode by Amplifier Type

Amplifier Type	High Fire Mode	Low Fire Mode
Series 14	Remove wire from terminal #4 on the amplifier	Remove wire from terminal #8 on the amplifier
Series 44	Remove wires from terminals #2 and #4 on the amplifier	Remove from terminal #9 on the amplifier

SC11 Signal Conditioner	Set BMS to max fire or remove input wires from terminals #6 and #5 and connect a 9VDC battery to the signal conditioner	Remove from terminal #1 on the signal conditioner
Series 94	Disconnect selector ribbon cable from the amplifier.	Remove wire from terminal #2 on the amplifier
Series MP2	Set system to maximum temperature	Remove wire from terminal #2 on the amplifer

20.6 Safety Shut Off Valve Check

After the initial start up and gas pressure adjustment, verify gas soundness of each SSOV (Safety Shut Off Valve). This check must be repeated after the first 100 hours of operation.

20.7 Temperature Control System Calibration

The temperature control system components are factory calibrated to a base resistance so that component replacement will not upset the system calibration. If the temperature control system should require field calibration, refer to the provided temperature control amplifier product information sheet.

Table 18: Maximum Temperature Rise

Model	Natural Gas		LPG	
	°F	°C	°F	°C
2005	90	50	80	44.5
2010 - 2030	110	61.1	90	50

FIGURE 35: MR 212 Valve

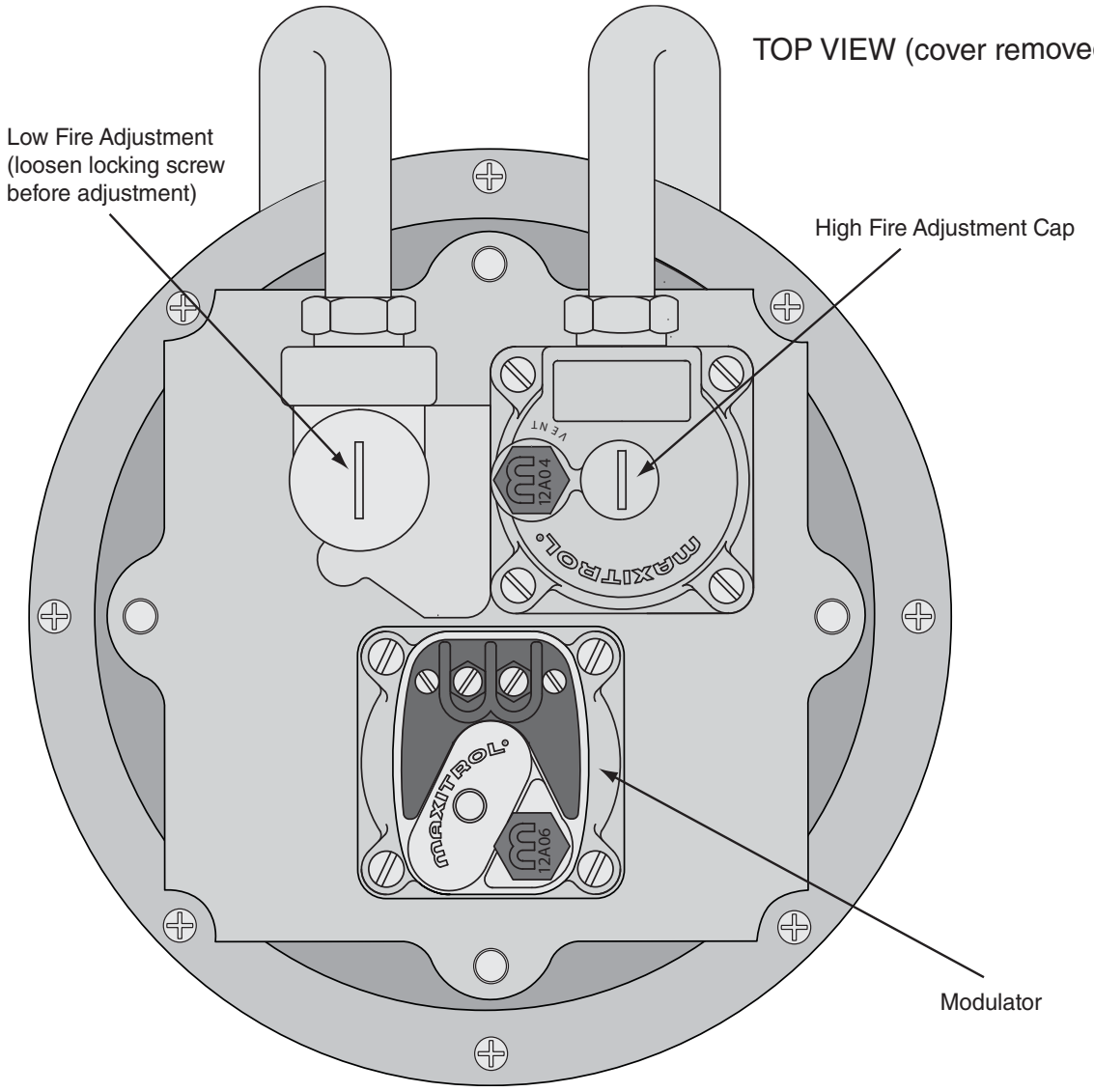

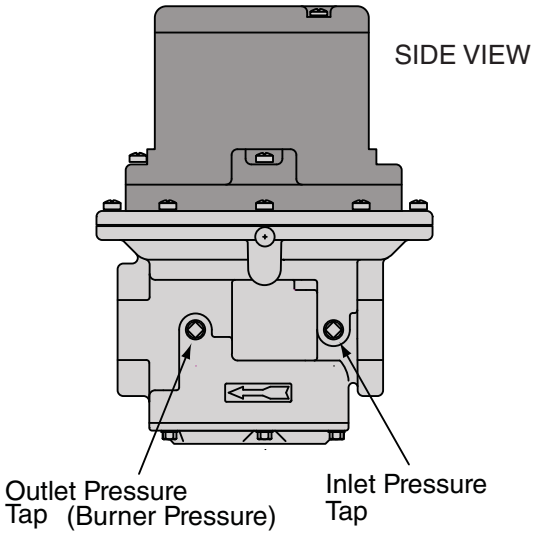

NOTE: For high fire adjustment, turn clockwise to increase manifold pressure; turn counter clockwise to decrease manifold pressure.

FIGURE 36: M611 Valve

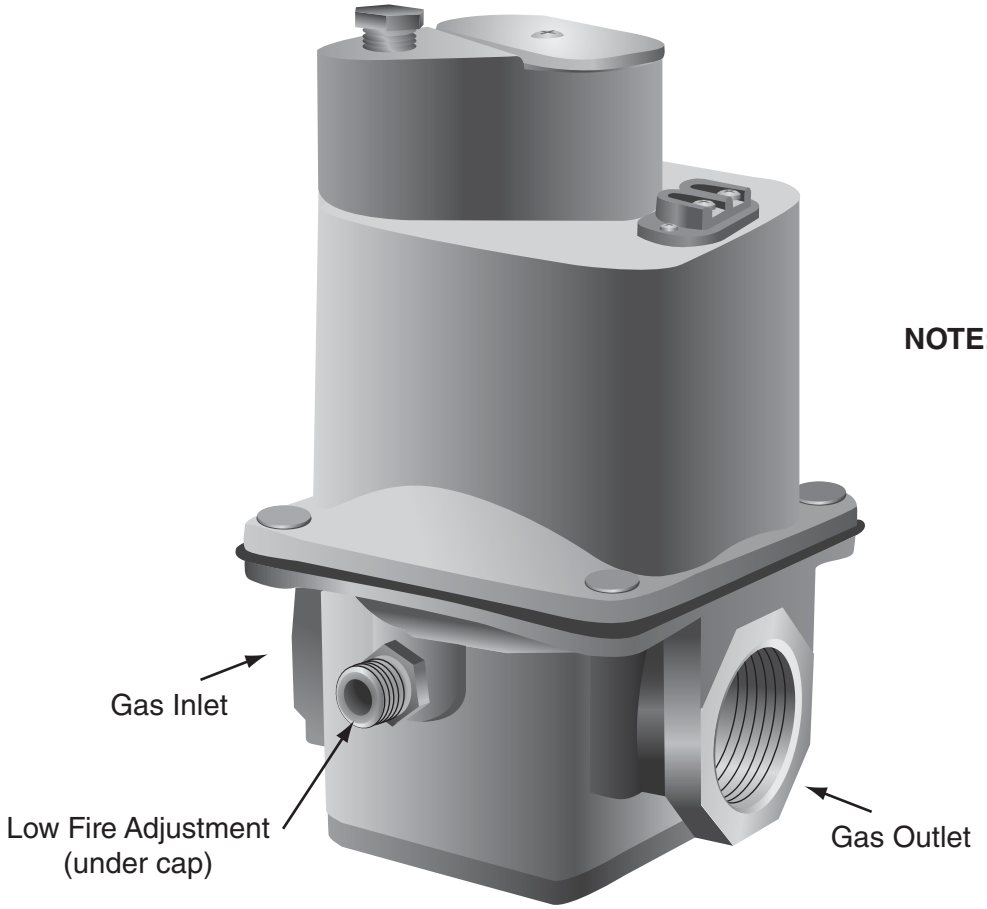

NOTE: Modulating only.

FIGURE 37: Regulator (2005)

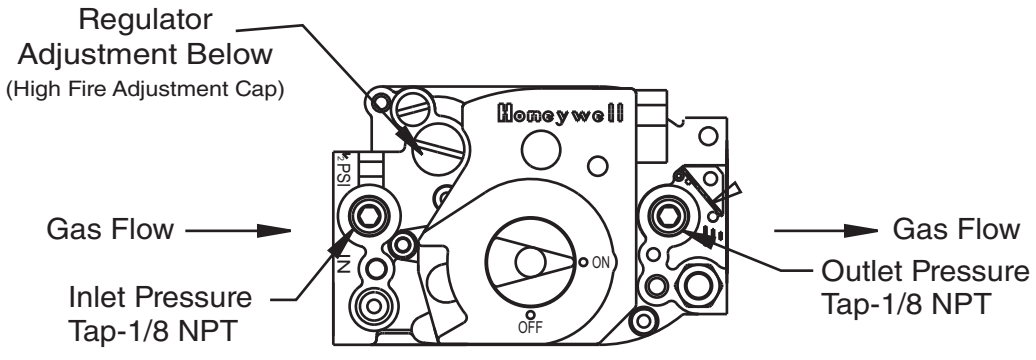

SECTION 21: MAINTENANCE

⚠ DANGER	
Electrical Shock Hazard **Disconnect electric before service.** **More than one disconnect switch may be required to disconnect electric from equipment.** **Equipment must be properly grounded.**	**Severe Injury Hazard** **Do not enter equipment while in operation.** **Equipment may start automatically.** **Do not operate with door open.** **Installation, operation and service must be done by a trained technician only.**
Failure to follow these instructions can result in death, injury or property damage.	

⚠ WARNING		
Explosion Hazard **Leak test all components of equipment gas piping before operation.** **Gas can leak if piping is not installed properly.** **Do not high pressure test gas piping with equipment connected.**	**Falling Hazard** **Use proper safety equipment and practices to avoid falling.** **Do not use any part of equipment as support.**	**Burn Hazard** **Allow equipment to cool before service.** **Internal components of equipment may still be hot after operation.**
Failure to follow these instructions can result in death, injury or property damage.		

Prior to any maintenance or service of the air handler, shut off, lockout and tagout the electrical disconnect and gas valve that supplies the unit in accordance with OSHA regulations and allow ample time for the air handler to cool. After maintenance is performed or air handler is serviced, the air handler shall be re-commissioned to the start-up procedure as outlined on *Page 61, Section 20*.

Installation Code and Annual Inspections:
All installation and service of RAPID® equipment must be performed by a contractor qualified in the installation and service of equipment sold and supplied by Rapid Engineering LLC and conform to all requirements set forth in the RAPID® manuals and all applicable governmental authorities pertaining to the installation, service and operation and labeling of the equipment.
To help facilitate optimum performance and safety, Rapid Engineering LLC recommends that a qualified contractor conduct, at a minimum, annual inspections of your RAPID® equipment and perform service where necessary, using only replacement parts sold and supplied by Rapid Engineering LLC.

21.1 General

First 8 Hours of Operation	Check belts and adjust as required (*See Page 63, Section 20.2.2*). Though belts were properly adjusted at the factory, they will stretch after the first few hours of operation.
First 100 Hours of Operation	Re-check belt tension and adjust if necessary.
Annual Fall Start-Up	Follow entire start-up procedure at this time and check control settings and operation. *See Page 61, Section 20*.

21.2 Unit Exterior

Cabinet Exterior	After installation, touch up scratches. Periodic painting should be done thereafter as required. The caulk around weather enclosures and over field joints should be inspected annually. Re-apply caulk as needed to maintain integrity. Warning labels and logo labels should be legible and accurate. Please contact Rapid Engineering LLC or RAPID® independent distributor if you need replacement warning labels or logo labels.
Unit Location	Verify that no flammable objects, liquids or vapors are present near the air handler. Do not hang anything from or place anything on the air handler. Keep the area under and around the air handler free of all objects. *See Page 5, Section 3* for Clearances to Combustibles.

21.3 Blower Section

Blower Wheel	Inspect blower wheel and clean as necessary. A small build up of dust can cause a significant decrease in blower performance. Check for excessive vibration, repair as required. Critical labels are located on or near the blower housing. Contact Rapid Engineering LLC or RAPID® independent distributor if you need replacement labels.

Drive Belts and Sheaves

Check for belt ride in the groove. In multiple groove drives, belt ride should be uniform. Check groove wear area for wear. Side wall of groove should be straight, not dished out. Bottom of groove should show no signs of belt contact.

Sheave alignment, set screw torque and belt tension should be checked after 8, 24, and 100 hours of initial start-up. Visually inspect belts and sheaves for excessive wear. If belts have a slick, glazed look, the belts are slipping. Check drive capacity and belt tension. Never replace only one belt in a used set, as used belts will elongate. Replace the entire set if replacement is necessary.

See Page 62, Section 20.2.1 and Page 63, Section 20.2.2.

Blower Bearing Lubrication

Blowers with spider bracket bearings are pre-lubricated and do not require any re-lubrication during their entire service life. Blowers that use pillow block bearings; should be re-lubricated per the chart below. The recommended lubricant is Shell Alvania #2 or S3 grease. To re-lubricate the blower pillow block bearings, be sure that the grease fittings on the bearing housing (or air handler cabinet wall in the case of extended grease lines) are clean. Apply the recommended grease to the fitting with a low-pressure grease gun and add slowly while the shaft is spun by hand. Do not over-grease. Over-greasing will reduce the service life of the bearings. Consult the blower manufacturer for grease capacity recommendations as capacities vary by model.

Lubrication Schedule			
Use a No.2 Lithium complex base grease or equivalent			
Hours Run Per Day	Suggested Lubrication Period in Weeks		
	251 to 500 RPM	501 to 750 RPM	751 to 1000 RPM
8	12	10	7
16	7	5	4

Motors

Inspection:

1. Inspect motor every 3 months or 500 hours of operation, which ever occurs first. Keep the motor clean and vent openings clear.

Lubrication:

1. Motors with grease fittings must be lubricated based on the table below.

Table 19: Motor Lubrication Intervals

NEMA Frame Size (Motor HP)	Rated at 1800 RPM
Up to 210 incl. (3 - 5 HP)	6,000 hrs
Over 210 to 280 incl. (7.5 - 20 HP)	4,750 hrs
Over 280 to 360 incl. (25 - 30 HP)	3,700 hrs

NOTE: *These intervals are based on severe duty. Over lubricating bearings could result in reduced motor life.*

2. A high grade ball or roller bearing grease must be used. Recommended grease for standard service is Polyrex EM (Exxon Mobil). Other compatible greases include; Texaco Polystar, Rykon Premium #2, Pennzoil Pen 2 Lube and Chevron SRI.
3. Motors without grease fittings are sealed for life and do not require relubrication.

Instructions for Lubricating

Before greasing, be sure fittings are clean and free from dirt. Remove grease relief plug or plate and, using a low-pressure grease gun, pump in the required grease. Do not over-grease. Overgreasing will reduce the service life of the motor. Consult the motor manufacturer for grease capacity recommendations as capacities vary by motor. Relubrication intervals are specified in the table above. After relubricating, allow motor to run for 10 minutes before replacing relief hardware.

NOTE: In general it is not recommended to mix greases of different brands. The mixing of different types of thickeners may destroy the composition and physical properties of the grease. In the event that a different grease is required by the end user, the following steps can be taken. Using the instructions for lubrication, open grease outlet and purge the system as much as possible of the old or unwanted grease. Repeat this same operation after 1 week of service. Consult Rapid Engineering LLC or the motor manufacturer for further recommendations on grease compatibility.

21.4 Manifold and Controls

Manifold	Periodically check gas control assembly and internal and external piping for leaks. Relief vent lines to outdoors on gas controls should be checked to ensure against blockage caused by insects or any other substance. Clean as required. All gas piping to the air handler must comply with the National Fuel Gas Code - NFPA54, latest edition and all local codes. Verify gas soundness of each SSOV (Safety Shut Off Valve). This test must be repeated after the first 100 hours of operation. *See Page 37, Figure 18 through Page 38, Figure 21*.
Air Flow Switch	An annual check of the tubes attached to the air flow switch should be made to ensure against blockage caused by insects or any other substance. Clean as required. *See Page 63, Section 20.4*.
Electric Components	Check for physical damage on any of the electric components and verify all electrical connections are secure. Ensure equipment is properly grounded.
Temperature Sensors	Calibrate space, outdoor air, and discharge air sensors as required. *See Page 63, Section 20.2.3*.

21.5 Burner

An annual inspection of the burner and components must be made to ensure proper and safe operation. For the most part, the burner is self cleaning. However, if the application is extremely dirty or dusty, it may become necessary to periodically clean the burner. Inspect and clean the burner in accordance with the following recommended procedures:

1. To avoid damaging the valves, disconnect the burner piping from the manifold, at the union, and cover the exposed end of the manifold. *See Page 37, Figure 18 through Page 38, Figure 21*.
2. Remove the pilot assembly. *See Page 43, Section 16.6.4*.
3. Remove the ignition cable from the igniter on the side of the burner, and then remove the spark igniter. Clean the igniter contacts with a wire brush. Set the gap to 0.125" (3.17 mm).
4. Inspect each of the stainless steel mixing plates to see that all of the air holes are free of debris. Clean with a wire brush as necessary.
5. The burner orifices may need to be drilled to unplug any closed orifices. Use a pin vise with the appropriate drill to clean debris from the orifices. An electric drill is not suggested because it is easy to snap drill bits off in the orifices.
6. Reinstall the pilot assembly. Reconnect the burner piping to the manifold at the union.

21.6 Optional Equipment

Dampers	Check linkage when applicable and tighten set screws as required. All moving parts of dampers should be cleaned and then thoroughly lubricated with a light molybdenum oil in aerosol can. Dampers furnished with stainless steel side seals should also have the seals lubricated generously. Dampers should then be manually operated several times until linkages and blades operate freely. Reconnect linkages and check dampers for proper operation. *See Page 30, Section 12*.
Filters	Filters should be checked for dirt restriction on a monthly basis (or as required). Replace filters with filters of equal specification when they appear dirty. **NOTE:** When using Rapid Engineering LLC supplied disposable polyester filters, they must be inserted with the white media side facing the inlet of filter section. When using Rapid Engineering LLC supplied permanent aluminum mesh or disposable filters, they must be inserted with the arrow on the filter pointing in the direction of airflow (toward the air handler). See inlet hood or filter section for filters. *See Page 21, Section 10.1 and See Page 23, Section 11*

SECTION 22: REPLACEMENT PARTS

⚠ DANGER | **⚠ WARNING**

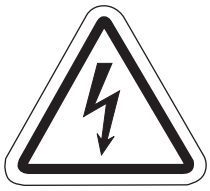

Electrical Shock Hazard | **Explosion Hazard** | **Fire Hazard** | **Carbon Monoxide Hazard**

Use only genuine RAPID® replacement parts per this installation, operation and service manual.

Failure to follow these instructions can result in death, electric shock, injury or property damage.

⚠ WARNING

Severe Injury Hazard

Use proper lifting practices and equipment.

Equipment and accessories are heavy.

Failure to follow these instructions can result in death, injury or property damage.

⚠ WARNING

Cut/Pinch Hazard

Wear protective gear during installation, operation and service.

Edges are sharp.

Failure to follow these instructions can result in injury.

Replacement parts list is for general direct fired applications and MAY NOT BE APPLICABLE for your specific unit configuration. Before ordering replacement parts, please contact factory to make sure that the replacement parts are the direct replacement for your specific unit.

Table 20: Control Panel Spare Parts

Description	Models	Part Number
Pressure Switch Low Airflow	All models	28892
Pressure Switch High Airflow	All models	
Maxitrol 1014U (Temp Control Amp)		07432
Maxitrol 1044 (Temp Control Amp)		07431
Mixing Tube	All models	07380
Discharge Air Sensor 1014		07337
Discharge Air Sensor 1044		07433
24 V Transformer 40 VA	All models	07037
Ignition Transformer	All models	18244
Direct-drive mod motor, two position, 35 in-lb	All models	01692
Direct-drive mod motor, two position, 35 in-lb	2020, 2030	27095
Direct-drive mod motor, floating point, 90 in-lb	2005,2010,2020,2030	22993
Direct-drive mod motor, 2-10VDC, 180 in-lb	2005,2010,2020,2030	28430
Ignition Control Module		07617
Flame Rod	All models	07590
High Temperature Limit Switch		17071
Igniter	All models	07640
Relay 15Amp		07165
Relay 8Amp		28560
Relay Socket		28561
DDC Controller	All models	10244

Table 21: Manifold Spare Parts

Model	2005	2010	2010B	2020	2030
Manifold size	**0.75"**	**1.0"**	**1.25"**	**1.5"**	**2.0"**
Safety shut off valve	36009	36010	36011	36012	36013
Modulating Valve	07440	07485.3	07490.3	07500.3	07505.3
Pilot Regulator	28311	28311	28311	28311	28311
Pilot Solenoid	07522	07522	07522	07522	07522
Manual ball valve (main)	72108	30002	30003	30004	30005
Manual ball valve (pilot)	30000	30000	30000	30000	30000
Visual Position Indicator	36001	36001	36001	36001	36001
High pressure switch	08602	08602	08602	08602	08602
Low pressure switch	08604	08604	08604	08604	08604
Vent valve	07225	07225	07225	07225	07225

Table 22: Blower Spare Parts

Model	2005		2010	2010B	2020	2030
	1000-2000 CFM	2000-4000 CFM				
Blower	62924	62923	P-000315	P-000316	P-000317	P-000318
Bearing	-	-	P-000627	P-000630	P-000633	P-000636
Shaft	-	-	P-000628	P-000631	P-000634	P-000637
Wheel	-	-	P-000629	P-000632	P-000635	P-000638

Table 23: Remote Spare Parts

Description	Remote Panel	Part Number
Rocker Switch Center Off	SDC & DTC	19899
Rocker Switch DPST	All	19898
Remote Temperature Selector	DTC	07390
Thermostat with Timer	DTC	28688
Amber Status Light	All	22550
Temperature Selector	Basic Remote & SDC	07345
Thermostat	SDC	07837
40VA Transformer	DTC	07037
Terminal Block	All	28057

Table 24: Motor Control Spare Parts

460/3/60													
	1	1.5	2	3	5	7.5	10	15	20	25	30	40	50
Overload	28706	28710	28710	28709	28708	28711	28712	28713	28714	28715	28716	28717	28718
Starter	33810	33810	33810	33810	33810	33811	33812	33813	33814	33815	33816	33817	33818
Fuse	25128	25091	25092	25093	25094	25095	25096	25097	25099	25100	25101	25103	25106
Fuse Block	25130	25130	25130	25130	25130	25130	25130	25130	25131	25131	25131	25132	25132

230/3/60													
	1	1.5	2	3	5	7.5	10	15	20	25	30	40	50
Overload	28709	2878	28708	28711	28712	28713	28714	28716	28717	28718	28719	28720	28720
Starter	33810	33810	33810	33811	33812	33813	33814	33816	33817	33818	33819	33819	33820
Fuse	25093	25114	25094	25115	25096	25116	25099	25101	25103	25106	25108	25109	25117
Fuse Block	25130	25130	25130	25130	25130	25130	25131	25131	25132	25132	25906	25906	25906

575/3/60													
	1	1.5	2	3	5	7.5	10	15	20	25	30	40	50
Overload	28705	28706	28710	28710	28708	28707	28711	28712	28713	28714	28714	28716	28717
Starter	33810	33810	33810	33810	33810	33810	33811	33812	33813	33814	33814	33816	33817
Fuse	18605	18609	18614	28610	18594	18598	18599	18607	18608	18622	18616	18619	
Fuse Block	18505	18505	18505	18505	18505	18505	18505	18505	18504	18504	18504	22648	

208/3/60													
	1	1.5	2	3	5	7.5	10	15	20	25	30	40	50
Overload	28709	28708	28708	28711	28712	28713	28714	28716	28717	28718	28719	28720	28720
Starter	33810	33810	33810	33811	33812	33813	33814	33816	33817	33818	33819	33819	33820
Fuse	25120	25094	25094	25095	25096	25116	25100	25121	25122	25106	25108	25110	25117
Fuse Block	25130	25130	25130	25130	25130	25130	25131	25132	25132	25132	25906	25906	25906

230/1/60							
	1	1.5	2	3	5	7.5	10
Overload	28708	28711	28712	28713	28714	28716	28717
Starter	33810	33811	33811	33812	33814	33815	33816
Fuse	25115	25095	25126	25097	25127	25101	25103
Fuse Block	25130	25130	25130	25130	25131	25131	25132

120/1/60							
	1	1.5	2	3	5	7.5	10
Overload	28712	28713	28713	28715	28717	28718	28719
Starter	33812	33813	33813	33815	33817	33818	33819
Fuse	25096	25097	25099	25100	25103	25108	25109
Fuse Block	25130	25130	25131	25131	25132	25906	25906

Table 25: V-Belts Spare Parts

Description	Part Number
V-BELT, BX49	02557
V-BELT, BX51	04448
V-BELT, BX50	42030
V-BELT, BX53	42026
V-BELT, BX89	04836
V-BELT, BX93	22371
V-BELT, BX103	22370
V-BELT, BX100	04465
V-BELT, 5VX1030	21225
V-BELT, BX115	P-000377
V-BELT, BX113	05468
V-BELT, 5VX1150	21229
V-BELT, BX120	04469
V-BELT, 5VX1180	04538
V-BELT, BX136	04470
V-BELT, 5VX1400	04539
V-BELT, BX133	04400
V-BELT, 5VX1500	04523
V-BELT, BX58	P-000376
V-BELT, BX59	22348
V-BELT, BX61	22350
V-BELT, BX99	22378
V-BELT, BX105	04466
V-BELT, BX112	04467

Description	Part Number
V-BELT, BX126	04597
V-BELT, BX128	04452
V-BELT, BX154	21290
V-BELT, BX150	04471
V-BELT, BX162	04472
V-BELT, BX52	42036
V-BELT, BX54	42028
V-BELT, BX92	12707
V-BELT, BX96	22372
V-BELT, 5VX1060	05896
V-BELT, 5VX1250	04522
V-BELT, BX144	04453
V-BELT, BX140	30817
V-BELT, 5VX1600	04518

SECTION 23: TROUBLESHOOTING

⚠ DANGER	
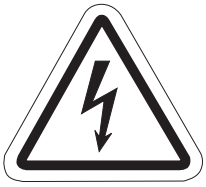	
Electrical Shock Hazard	**Severe Injury Hazard**
Disconnect electric before service. **More than one disconnect switch may be required to disconnect electric from equipment.** **Equipment must be properly grounded.**	**Do not enter equipment while in operation.** **Equipment may start automatically.** **Do not operate with door open.** **Installation, operation and service must be done by a trained technician only.**
Failure to follow these instructions can result in death, electrical shock or injury.	

⚠ WARNING				
Explosion Hazard	**Fire Hazard**	**Falling Hazard**	**Burn Hazard**	**Cut/Pinch Hazard**
Turn off gas supply to equipment before service.	**Keep all flammable objects, liquids and vapors the minimum required clearances to combustibles away from equipment.** **Some objects will catch fire or explode when placed close to equipment.**	**Use proper safety equipment and practices to avoid falling.** **Do not use any part of equipment as support.**	**Allow equipment to cool before service.** **Internal components of equipment may still be hot after operation.**	**Wear protective gear during installation, operation and service.** **Edges are sharp.**
Failure to follow these instructions can result in death, injury or property damage.				

23.1 Initial Checks

When encountering any abnormal operation or fault conditions of the equipment, all troubleshooting should start with the following initial checks. If a problem is discovered in these initial checks it must be corrected before moving on in the trouble shooting.

1. Compare voltage and phase of supply power on site with rating plate information.
2. Review wiring between remote panel and control panel. Do the electrical connections match the supplied wiring diagram?
3. Compare gas type and supply pressure on site with rating plate information.
4. Check for proper blower rotation on air handler and any exhaust blowers.
   - Blowers powered with a three phase motor can be reversed by swapping any two incoming power legs. For blowers powered by a single phase motor refer to the motor rating plate for reversing instructions.

23.2 Motor and Blower

PROBLEM	POSSIBLE CAUSE	SOLUTION
Motor does not operate	Main disconnect switch is OFF	Turn disconnect to ON
	Blown fuse(s) in disconnect	Replace fuse(s)
	Blown fuse(s)/breaker tripped in control transformer	Replace fuse(s)/reset breaker (with disconnect off)
	Fan switch on	Check wiring between remote panel and air handler. Replace switch.
	Optional: Damper does not open	Check that damper is not obstructed Check that linkage is tight and secure Replace damper actuator
	Motor starter (contactor) does not operate.	Replace starter
	Tripped motor overload. Power out to MUA motor when motor starter is energized?	Reset Check for proper FLA setting Replace overload If applicable: Tighten screws on heater packs or overload.
	Optional: Low limit switch set to high	Re-adjust low limit switch setting
Blower does not operate	Belts broken or loose?	Replace/tighten belts
	Loose motor or blower sheaves (pulleys)	Reinstall and properly torque set-screws
	Blower bearings, do they turn freely?	Replace bearing(s)

23.3 Burner

PROBLEM	POSSIBLE CAUSE	SOLUTION
Flame control does not try for ignition	Auxiliary contact not closed.	Properly mount contact or replace
	Burner/winter switch closed?	Replace switch
	High temp limit switch tripped?	Manually reset or replace
	Low airflow pressure switch contacts not made.	Check blower operation Reconnect tubes to pressure switch Clean pressure test tubes Check filters/duct work for restrictions
	High airflow pressure switch contacts not made.	Check blower FLA and compare to data plate. Cabinet pressure too high check system setup and for restrictions down stream of blower.
	Optional: Mild weather stat, dial set to low	Set dial higher Replace stat
	Optional: High gas pressure switch	Manual reset Verify gas pressure
	Optional: Low gas pressure switch	Manual reset Verify gas pressure
	Flame control defect	Replace
Burner Lockout	Failure to ignite pilot or main flame Flame control failure	Reset the flame control module at the unit and proceed to the next step, observing the unit to indicate at which step lockout condition occurs.
No PILOT flame	No spark	Check wiring from burner control to ignition transformer. Check high tension wire to spark plug. Replace ignition transformer.
	No gas	Open manual gas shut off valves. Check wiring from burner control to pilot gas valve. Verify inlet gas pressure. Adjust pilot gas pressure. Replace pilot gas valve. Check burner pilot opening for obstruction.
Pilot flame does not stay lit	Improper pilot gas pressure	Adjust pilot gas pressure.
	Flame rod does not detect flame, Is there 5VDC on Flame signal at flame safeguard?	Replace flame rod Replace flame rod
	Flame rod dirty	Clean flame rod

Burner (continued)

PROBLEM	POSSIBLE CAUSE	SOLUTION
No main flame	Manual shut off valve closed	Open manual shut off valve
	Safety Shut Off Valve not operating. Is there positive gas pressure downstream of SSOV?	Check wiring from burner control to SSOV Verify inlet gas pressure Replace SSOV
	Minimum gas supply pressure	Verify minimum gas supply pressure as per data plate is available
	Burner openings obstructed	Remove obstruction Clean burner orifices holes
	Improper burner lower fire adjustment on modulating valve	Adjust low fire as per the relevant Maxitrol temperature control instructions

23.4 Temperature Controls

If temperature control problems occur and are not remidied in the troubleshooting procedure, refer to the trouble shooting table for the unit specific temperature control amplifier.

For units with the Maxitrol® series 14 temperature control amplifier, refer to the Field Service Check List for Series A1014 Amplifiers. Series 14 Amplifiers are supplied on units equipped with Basic and SDC style remote panels.

For units with the Maxitrol® series 44 temperature control amplifier, refer to the Field Service Check List for Series A 1044 Amplifiers. Series 44 Amplifiers are supplied on units equipped with DTC remote panels.

If problems persist after performing the troubleshooting procedure and the temperature control amplifier troubleshooting procedure contract the factory.

23.5 A1014 Amplifier - Field Checklist

SYMPTOM		POSSIBLE CAUSE
A.	No Gas Flow	1. Modulating valve improperly installed.
B.	Continuous Low Fire (electronics problem).	2. Short circuit or no voltage to the amplifier. 3. Open circuit in TD114. Remote Temperature Selector circuit or wiring. 4. Short circuit in TS114, Discharge Air Sensor circuit or wiring. 5. Faulty amplifier.
C.	Continuous Low Fire (electronics ok)	6. Short circuit or open circuit in Modulator Coil. 7. Plunger missing, jammed or improperly installed.
D.	Incorrect Minimum Fire Erratic or Pulsating Flame.	8. Incorrect by-pass metering valve adjustment. 9. Excessive negative burner pressure.
E.	Continuous High Fire (electronics problem).	10. Short circuit in TD114 Remote Temperature Selector circuit or wiring. 11. Open circuit in TS114/TS10765. Discharge or Inlet Air Sensor Circuit or wirir 12. Jumper not connected across amplifier terminals 2 and 3.
F.	Continuous High Fire (electronics ok).	13. Foreign object holding valve open. 14. Plunger jammed.
G.	Incorrect Maximum Fire.	15. Inlet pressure too low. 16. Incorrect outlet pressure adjustment of Pressure Regulator.
H.	Erratic or Pulsating Flame.	17. Hunting 18. Erratic air patterns or improper TS114 location. 19. Wiring is run next to high voltage switching circuits causing induced voltages 20. Faulty Amplifier or erratic voltage supply.
I.	Incorrect Discharge Air Temperature	21. Inlet Air Sensor is used. 22. Incorrect Wiring. 23. System out of calibration. 24. Improper TS114 location. 25. Room Override Thermostat circuit closed.
J.	Burned out Transformer.	26. Short circuit in modulator coil. 27. Short circuit between amplifier and modulator valve.
K.	Discharge Air Temperature too Low when T115 is Operative	28. Too low an Override Temperature setting. 29. Burner capacity may be insufficient.

FIELD TEST	REMEDY
1. Arrow on side of Valve should point in direction of gas flow.	1. Install properly.
2. Check for 24VAC at amplifier terminals 7 & 8. 3. Inspect for loose or broken wires between amplifier terminals 1 & 2, and TD114 terminals 1 & 2, and TD114 terminals 1 & 3. 4. Connect test resistor as described in Preliminary Circuit Analysis, in Maxitrol product information sheet. Follow procedure outlined. 5. Check items 2, 3, and 4.	2. Prove the power source. 3. Tighten connections or replace wiring. 4. If modulating voltages are obtained, Check TS114 circuit for sho Replace TS114 if necessary. 5. If items 2, 3, and 4 check out and modulating voltages are still n obtained, amplifier may be assumed faulty. Replace.
6. Measure resistance across modulator terminals with connecting wires detached. 7. Inspect. Plunger should be installed per diagrams in Maxitrol information sheet and operate freely in solenoid sleeve.	6. Replace modulator head if not approximately 45-55 ohms for M6 Valve and 60-80 ohms for MR212 Valve. 7. Clean or replace plunger if necessary. Install per Maxitrol produc information sheet.
8. See valve adjustments in Section 19.5. 9. Measure manifold pressure as outlined in Section 19.4.	8. Adjust to proper minimum fire. 9. If reading is greater than 1.0 in wc negative pressure, check for clogged filters or other inlet air restrictions. Consult factory for othe solutions.
10. Inspect for shorts at or between Amplifier terminals 1 & 2 or TD114 terminals 1 & 3. 11. Check TS114/TS10765 for open internal circuit. Connect test resistor as described in Preliminary Circuit Analysis, in Maxitrol product information sheet. Follow procedure outlined. 12. Inspect	10. Correct wiring if shorts exist. 11. If modulating voltages are obtained, check TS114/TS10765 for c circuits. Replace TS114/TS10765. 12. Correct the wiring.
13. Remove button plate and inspect valve and seat. 14. Inspect. Plunger should be smooth, clean, and operate freely in solenoid sleeve.	13. Clean seat. Clean valve or replace if necessary. 14. Clean, or if necessary, replace plunger.
15. Read pressure at inlet to modulating valve using a manometer with unit operating at full fire. Pressure should be equal to the sum of outlet pressure setting plus pressure drop of the valve (see Maxitrol capacity chart). 16. Read manifold pressure using manometer and compare with recommendation of equipment manufacturer.	15. Increase inlet pressure if possible. 16. See valve adjustments in Section 19.5.
17. Adjust sensitivity control counter-clockwise. 18. Connect test resistor as described in Preliminary Circuit Analysis, in Maxitrol product information sheet. Turn TD114 selector dial so heater goes through its entire modulating range. 19. Temporarily wire each of TD114, TS114, and MR212 externally and observe heater/equipment operation. 20. With test resistor connected (per item #18) and TD114 locally connected (per item #19), turn TD114 selector dial through entire modulating range. Observe D.C. voltage across modulator terminals.	17. If flame stabilizes, adjust sensitivity control to maintain an even flame. 18. If the flame is steady throughout the entire modulating range, th TS114 must be moved. 19. If smooth operation results, isolate effected wiring from source induced voltage. 20. If erratic or unstable DC voltages are obtained throughout the modulating range, the amplifier may be assumed faulty. Replace. I erratic operation is noted only over a small range of 2 or 3 volts, the age source may contain surges. Consult factory.
21. Inlet Air Sensor changes 1°, for each 3.5°, 5°, or 8° outside temperature change from 60° (pre-determined - turndown varies with model used). 22. Check wiring diagrams per maxitrol product.* 23. Sensed temperature (thermometer next to TS114) does not correspond to TD114 setting. 24. Sensed temperature (thermometer next to TS114) does not represent average discharge air temperature. 25. Remove Override Thermostat lead from terminal 2 of TD114. *information sheet	21. Sensed temperature will vary from TD114 dial settings. This is intentional. 22. Correct wiring. 23. See calibration procedure. 24. Move TS114 to location where average representative tempera can be sensed. 25. TD114 dial setting, then check thermostat setting and/or check ing for shorts.
26. Measure resistance across modulator terminals with red lead wires disconnected. 27. Inspect wiring.	26. Replace modulator head if less than 40 ohms. 27. Correct wiring if short is found.
28. Check “Override Temperature Selector” of TD114. 29. Check for high fire (Maximum manifold pressure specified for heater).	28. Reset to correct temperature. 29. If on high fire, control can do no more. Heater unable to furnish ditional heat to raise temperature.

23.6 A44 Amplifier - Field Service Checklist

SYMPTOM		POSSIBLE CAUSE
A.	No gas flow.	1. Valve improperly installed.
B.	Continuous low fire (electronics ok).	2. Open circuit in modulator coil. 3. Plunger missing, jammed or improperly installed. 4. Ruptured main or balancing diaphragm.
C.	Continuous Low Fire (electronics problem)	5. No voltage to the amplifier. 6. Short in modulator coil circuit. 7. Short in TS144 circuit. 8. Faulty amplifier.
D.	Incorrect Low Fire	9. Incorrect by-pass metering valve adjustment. 10. Excessive negative burner pressure.
E.	Continuous Minimum Discharge Air Temperature	11. Faulty amplifier. 12. Short in T244 or TS244/TD244 circuit 13. Incorrect space temperature calibration.
F.	Incorrect Max. or Min. Discharge Air Temperature.	14. Improper TS144 location. 15. Incorrect discharge air temperature calibrations
G.	Continuous High Fire (electronics ok)	16. Foreign material holding valve open. 17. Plunger jammed.
H.	Continuous High Fire. (electronics problem)	18. Open circuit in TS144
I.	Incorrect High Fire	19. Inlet pressure too low. 20. Incorrect outlet pressure adjustment.
J.	Continuous Maximum Discharge Air Temperature	21. Faulty amplifier. 22. Open circuit in T244 to TS244/TD244 23. Incorrect space temperature calibration.
K.	Burned out Transformer. No Voltage to Amplifier	24. Short in modulator coil circuit.
L.	Incorrect Space Temperature.	25. Incorrect maximum discharge air temperature setting (A1044). 26. Incorrect minimum discharge air temperature setting (A1044). 27. Insufficient burner capacity. 28. Incorrect space temperature calibration.

*Control circuits external to the Series 44 can cause burner malfunction. Always check manual valve to be certain gas is on, and check limit contro for normal operation.

FIELD TEST	REMEDY
1. Arrow on side of valve should point in direction of gas flow.	1. Install properly.
2. Remove wires connected to amplifier terminals 6 & 7 and measure resistance. MR212 (60-80 ohms), M611 (45-55 ohms). 3. Inspect - plunger should be installed per Maxitrol product information sheet and operate freely in solenoid sleeve. 4. Disassemble valve for inspection of internal parts.	2. If proper resistance values are not observed, replace modulator head or repair wiring. 3. Clean or replace plunger if necessary and install per Maxitrol product information sheet. 4. Replace diaphragm if ruptured.
5. Check for 24VAC at amplifier terminals 8 & 9. 6. Measure resistance per item 2. 7. Remove wires connected to amplifier terminals 1, 2, & 3. Measure resistance across wires 1 & 3, then 2 & 3. Meter should read greater than 2500 ohms. 8. Follow procedures outlined in "PRELIMINARY CIRCUIT ANALYSIS" (Sections I & II) in Maxitrol product information sheet.	5. Provide 24VAC to amplifier. Refer to item 24. 6. If proper resistance values are not observed, replace modulator head or repair wiring. 7. If readings are incorrect, replace the TS144 or repair wiring. 8. If power source and modulator coil check out (items 5 & 6) but proper modulating voltages cannot be obtained, then amplifier may be assumed at fault. Install replacement amplifier.
9. See Valve Adjustments - Section 19.5. 10. Measure manifold pressure as outlined in Section 19.4.	9. Adjust to proper low fire. 10. If greater than 1.0 in wc negative pressure, check equipment for clogged filters & other inlet air restrictions. For other solutions, consult factory.
11. Follow procedures outlined in "PRELIMINARY CIRCUIT ANALYSIS" (sections I & II), in Maxitrol product information sheet. 12. Remove wires connected to amplifier terminals 4 & 5. Set T244 or TD244 to maximum setting. Measure resistance across wires. Meter should read 6000 ohms +/- 1000 (T244). If TS244/TD244 are used, meter should read 4500 ohms +/- 1000 (TS244) and 2100 ohms +/- 150 (TD244). 13. Follow procedures outlined in "PRELIMINARY CIRCUIT ANALYSIS" (Sections IV), in Maxitrol product information sheet.	11. If amplifier is proven at fault, install replacement amplifier. 12. If reading is incorrect, replace the T244, TS244/TD244 or repair wiring. 13. If proper action is obtained, first check item 12. Recalibrate if necessary See section 19.7.
14. Compare sensed temperature reading at TS144 with average discharge air temperature. 15. Follow procedures outlined in "PRELIMINARY CIRCUIT ANALYSIS" (Sections IV), in Maxitrol product information sheet.	14. Move TS144 to location where average temperature can be sensed. 15. If proper temperatures are not observed, refer to temperature calibration procedures, in Maxitrol product information sheet.
16. Remove button Plate and inspect valve and seat 17. Inspect - plunger should be smooth and clean and operate freely in solenoid sleeve.	16. Clean, replace valve and/or seat if necessary. 17. Clean, or if necessary, replace plunger.
18. Measure resistance per item 7.	18. If readings are incorrect, replace the TS144 or repair wiring.
19. Read inlet pressure at valve, using a manometer with heater operating at full fire. Pressure should be at least equal to the sum of: outlet pressure setting and pressure drop of the valve (See Maxitrol Capacity Chart Bulletin) plus 1.0 in wc. 20. Read outlet pressure using manometer and compare with recommendation of equipment manufacturer.	19. Increase inlet pressure if possible or change to larger valve. Consult factc about possibility of using special spring to reduce pressure drop on selected installations. 20. See valve adjustments in section 19.5.
21. Follow procedure outlined in "PRELIMINARY CIRCUIT ANALYSIS" (Sections I & II), in Maxitrol product information sheet. 22. Measure resistance per item 12. 23. Follow procedures outlined in "PRELIMINARY CIRCUIT ANALYSIS: (Section IV), in Maxitrol product information sheet.	21. If amplifier is proven at fault, install replacement amplifier. 22. If reading is incorrect, replace the T244, TS244/TD244 or repair wiring. 23. If proper action is obtained, first check item 22. Recalibrate if necessary. Refer to Temperature Calibration Proceedures in Maxitrol product information sheet
24. Measure resistance per item 2.	24. If proper resistances are not observed, replace modulator head or repair wiring.
25. Check to see if heater is delivering air at maximum discharge air setting. 26. Check to see if heater is delivering air at maximum discharge air setting. 27. Check to see if heater is operating at high fire. 28. Place thermometer next to T244 or TS244. Compare space temperature reading with T244 or TD244 dial setting.	25. If desired temperature is not reached, increase maximum discharge air temperature setting. 26. If desired space temperature is not reached, decrease minimum discharg air temperature setting. 27. If desired space temperature is not reached with heater at high fire, it may be undersized. Consult manufacturer. 28. If temperature reading is incorrect, check items 25, 26, & 27, then recalibr if necessary.

SECTION 24: RAPID® 2000-SERIES START-UP PROCEDURES

Date of Installation _____ Model # _____ Serial # _____

2000-Series Start Up Form

Installed at:

Name: _____

Address: _____

Phone: _____

Fax: _____

Service Company

Name: _____

Address: _____

Phone: _____

Fax: _____

Notice: Please return a completed copy to Rapid Engineering LLC. If this document is not returned, the manufacturing date will be used as the warranty start date.

⚠ WARNING

Explosion Hazard **Leak test all components of equipment gas piping before operation.** **Gas can leak if piping is not installed properly.** **Do not high pressure test gas piping with equipment connected.**	**Carbon Monoxide Hazard** **Do not recirculate air from the heated space over burner.** **Air supply to burner must be from outside.**	**Falling Hazard** **Use proper safety equipment and practices to avoid falling.** **Do not use any part of equipment as support.**	**Burn Hazard** **Allow equipment to cool before service.** **Internal components of equipment may still be hot after operation.**

Failure to follow these instructions can result in death, injury or property damage.

⚠ DANGER

Electrical Shock Hazard

Disconnect electric before service.

More than one disconnect switch may be required to disconnect electric from equipment.

Equipment must be properly grounded.

Failure to follow these instructions can result in death or electrical shock.

Receiving Inspection

Check installation site to ensure all codes and engineering specifications are correct. Place a check next to line items completed or enter data.

1. Inspect air handler and all accessories for possible shipping damage.
   No Damage___ Damaged ___.
   (Specify on separate sheet.)
2. Check packing list against items received.
   OK ___ Missing items ____ (Call factory.)
3. Check all nuts, bolts and fasteners to ensure they are tight. OK ____ Loose____ (Specify.)
4. Check sheaves, set screws and bearing collars. Make sure they are tight.
   OK ____ Loose ____ (Specify.)
5. Compare voltage on unit rating plate to job site voltage.
   Job Site Voltage _____/____/_____.
6. Compare gas type and supply pressure on unit rating plate to job site gas supply.
   Job Site Gas Type____ Supply Pressure_____

7. Check lifting brackets to make sure they are tight and secure before lifting heater.
   OK __.
8. For FR, AM models: CO2 sensor installed?
   OK ____

The following procedures reference pages and tables from the 2000-Series Installation, Operation and Service Manual (P/N RP121100NA). Contact the local RAPID® independent distributor or Rapid Engineering LLC for a manual.

At Start-up:
Verify proper belt tension and sheave alignment per instructions *on Page 62, Section 20.2.1*.
OK _____.
Verify proper torque on all sheaves per table *on Page 63, Section 20.2.2*.
OK _____.

Air Temperature Sensing:
1. The sensing probe is factory mounted in the blower housing. (Advance to next section.)

Electrical (*Page 40, Section 16*)
1. Check all motor starters for proper overload settings. The overload should not exceed Full Load Amps for the motor.
   _____ A.
2. What is the supply voltage to the air handler?
   Air Hander Off ____ #1____#2 ____ #3 ____
   Air Hander On ____ #1____#2 ____ #3 ____
3. Verify correct fan rotation. OK _____.
4. What is total system current draw?
   Motor current draw (Burner Off)? _____.
   Burner and motor current draw? _____.
5. Compare all variable frequency drive (VFD) programming parameters with specifications provided on electrical drawing. OK _____.
6. For VFD systems, make sure to set programming parameters for proper overload protection.
   (See VFD Instruction Manual). OK _____.
7. If more than one exhaust motor is used with one VFD, each motor must have its own overload protection.
   OK _____.

Differential Pressure: (*Page 39, Section 15.5.1*)
1. In order to verify proper airflow across the burner, the differential pressure across the profile plate needs to be measured. Attach a manometer to the pressure test ports where the pressure switch is attached and measure the differential pressure with a manometer. This reading must be 0.9 in wc +-0.1 in wc (2.24 +/- 0.25 mbar)

Record differential box pressure _____ in. wc/mbar

Burner Pressure: (*Page 39, Section 15.5.2*)
1. A pressure tap between the Maxitrol modulating valve and the burner is used to measure negative airflow at the burner and to set high fire gas pressure. This tap could also be located on the Maxitrol valve itself, manual shut off valve or “T” fitting. See unit data plate on control enclosure door for high fire setting.
2. Record burner pressure with inlet manual gas valve off and blowers on _____ in wc/mbar

Gas Piping and Initial Pressure Setting:
(*Page 39, Section 15.4*)
1. Perform a pressure test on all gas supply lines to air handler per local codes. OK _____.
2. Verify supply pressure does not exceed maximum rated gas pressure as stated on the rating plate. OK_____.
3. Set the supply gas pressure at the step down regulator (normally outside of the enclosure if one is installed), according to the rating plate inlet gas pressure specifications.
   Fuel Type: _____ Pressure: _____.
4. Only after performing steps 1-3, open the main gas valve and close the manual gas valve downstream of the MR valve. Set the burner switch to on. Verify pilot pressure, and flame signal of 5.0 VDC. OK _____.

(To adjust pilot flame, set pilot regulator to 1.0 in wc (2.5 mbar) natural gas or 0.5 in wc (1.25 mbar) L.P. gauge pressure.

5. Open both manual gas valves at air handler. Force the burner into high fire. *See Page 65, Table 17*, “Burner Mode By Amplifier Type”. Read the gas pressure at the MR valve and set according to the determined high fire gas pressure in Table. The small cap screw is for high fire on MR212 valve only. Take a reading of the temperature rise. Temperature rise must be in accordance with *Page 66, Table 18*.
   High Fire Discharge Temperature _____°F/°C
   _____Manifold Pressure for Maximum Input (from rating plate)
   _____Burner Pressure
   _____High Fire Gas Pressure Setting

There are three critical items to consider before adjusting low fire:

A. Low fire adjustment does not regulate gas pressure.
B. If the low fire adjustment screw is set to maximum, high fire regulation problems will occur.
C. The burner control system must be forced into low fire per Maxitrol's instruction for the given amplifier/temperature control system. *See Page 65, Table 17*, “Burner Mode By Amplifier Type”.
*

6. Low fire is set at the MR212 valve using the adjustment screw under the large cap screw, or on the M611 valve using the brass adjusting screw on the side. The burner must be forced into low fire first. The low fire ribbon across the burner must be adjusted. OK_____.

Once gas pressure and high/low fire adjustments are made, the gas setup is completed. All taps and instruments must be removed and all caps and plugs must be replaced.

Please leave all manuals and a copy of this sheet with the air handler!

Technician's Name:_____

Signature:_____

Date:_____

SECTION 25: THE RAPID® 2000-SERIES WARRANTY

RAPID ENGINEERING LLC WILL PAY FOR:

Within 24 months from date of purchase by buyer or 27 months from date of shipment by Rapid Engineering LLC (whichever occurs first), replacement parts will be provided free of charge for any part of the product which fails due to a manufacturing or material defect.

Rapid Engineering LLC will require the part in question to be returned to the factory. Rapid Engineering LLC will, at its sole discretion, repair or replace after determining the nature of the defect and disposition of part in question.

RAPID® Replacement Parts are warranted for a period of 12 months from date of shipment from Rapid Engineering LLC or the remaining RAPID® 2000-Series warranty.

RAPID ENGINEERING LLC WILL NOT PAY FOR:

Service trips, service calls and labor charges.

Shipment of replacement parts.

Claims where the total price of the goods have not been paid.

Damage due to:

- Improper installation, operation or maintenance.
- Misuse, abuse, neglect, or modification of the RAPID® 2000-Series in any way.
- Use of the RAPID® 2000-Series for other than its intended purpose.
- Incorrect gas or electrical supply, accident, fire, floods, acts of God, war, terrorism, or other casualty.
- Improper service, use of replacement parts or accessories not specified by Rapid Engineering LLC.
- Failure to install or maintain the RAPID® 2000-Series as directed in the Installation, Operation and Service Manual.
- Relocation of the RAPID® 2000-Series after initial installation
- Use of the RAPID® 2000-Series in a corrosive atmosphere containing contaminants.
- Use of the RAPID® 2000-Series in the vicinity of a combustible or explosive material.
- Any defect in the RAPID® 2000-Series arising from a drawing, design, or specification supplied by or on behalf of the consumer.
- Damage incurred during shipment. Claim must be filed with carrier.

WARRANTY IS VOID IF:

The RAPID® 2000-Series is not installed by an contractor qualified in the installation and service of gas fired heating equipment.

You cannot prove original purchase date and required annual maintenance history.

The data plate and/or serial number are removed, defaced, modified or altered in any way.

The ownership of the RAPID® 2000-Series is moved or transferred. This warranty is non-transferable.

Rapid Engineering LLC is not permitted to inspect the damaged equipment and/or component parts.

READ YOUR INSTALLATION, OPERATION AND SERVICE MANUAL.

If you have questions about your equipment, contact your installing professional. Should you need Replacement Parts or have additional questions, call or write:

Rapid Engineering LLC
1100 Seven Mile Road NW
Comstock Park, MI 49321
Telephone: +1.616.784.0500
Fax: +1.616.784.0435
Toll Free: 800.536.3461
www.rapidengineering.com

Rapid Engineering LLC's liability, and your exclusive remedy, under this warranty or any implied warranty (including the implied warranties of merchantability and fitness for a particular purpose) is limited to providing replacement parts during the term of this warranty. Some jurisdictions do not allow limitations on how long an implied warranty lasts, so this limitation may not apply to you. There are no rights, warranties or conditions, expressed or implied, statutory or otherwise, other than those contained in this warranty.

Rapid Engineering LLC shall in no event be responsible for incidental or consequential damages or incur liability for damages in excess of the amount paid by you for the RAPID® 2000-Series. Some jurisdictions do not allow the exclusion or limitation of incidental or consequential damages, so this limitation or exclusion may not apply to you. This warranty gives you specific legal rights, and you may also have other rights which vary from jurisdiction to jurisdiction.

Rapid Engineering LLC shall not be responsible for failure to perform under the terms of this warranty if caused by circumstances out of its control, including but not limited to war, fire, flood, strike, government or court orders, acts of God, terrorism, unavailability of supplies, parts or power. No person is authorized to assume for Rapid Engineering LLC any other warranty, obligation or liability.

LIMITATIONS ON AUTHORITY OF REPRESENTATIVES:

No representative of Rapid Engineering LLC, other than an Executive Officer, has authority to change or extend these provisions. Changes or extensions shall be binding only if confirmed in writing by Rapid Engineering LLC's duly authorized Executive Officer.

OWNER WARRANTY REGISTRATION CARD

Mail or Fax to:

Rapid Engineering LLC • 1100 Seven Mile Road NW • Comstock Park, MI • Phone: 616-784-0500 • Fax: 616-784-1910
Toll Free: 800-536-3461 • www.rapidengineering.com

About the Owner:

Name:_____

Address:_____City:_____State:_____Zip Code:_____

Phone:_____ Fax:_____ E-mail:_____

About the Installer:

Name:_____

Address:_____City:_____State:_____Zip Code:_____

Phone:_____Fax:_____E-mail:_____

Purchased From (if different than installer):

Name:_____

Address:_____City:_____State:_____Zip Code:_____

Phone:_____ Fax:_____ E-mail:_____

About your Heater:

Model#:_____ Serial #:_____ Fuel:_____Installation Date:_____

Type of Installation (check one):

o Automotive	o Manufacturing	o Warehouse	o Recreational	o Aircraft
o Public Building	o Office	o Retail	o Agricultural	o Other_____

Installation Code and Annual Inspections: All installations and service of RAPID® equipment must be performed by a contractor qualified in the installation and service of equipment sold and supplied by Rapid Engineering LLC and conform to all requirements set forth in the RAPID® manuals and all applicable governmental authorities pertaining to the installation, service and operation of the equipment.

To help facilitate optimum performance and safety, Rapid Engineering LLC recommends that a qualified contractor annually inspect your RAPID® equipment and perform service where necessary, using only replacement parts sold and supplied by Rapid Engineering LLC.

This product is not approved for residential use.

© 2015 Rapid Engineering LLC - All rights reserved. No part of this work covered by the copyrights herein my be reproduced or copied in any form or by any means – graphic, electronic, or mechanical, including photcopying, recording, taping, or information storage and retrieval systems – without written permission of Rapid Engineering LLC.

Printed in the U.S.A.

Attach this information to the wall near the RAPID® remote panel or equipment controls.

Rapid® Engineering LLC

Read the Installation, Operation and Service Manual thoroughly before installation, operation or service.

OPERATING INSTRUCTIONS

1. Stop! Read all safety instructions on this information sheet.
2. Open the manual gas valve in the air handler supply line.
3. Turn on electric to the air handler.
4. Set temperature selector and, if equipped, thermostat, to desired setting.
5. Set FAN switch to "ON".
6. Set BURNER switch to "ON".

TO OPERATE AS VENTILATOR

1. Stop! Read all safety instructions on this information sheet.
2. Turn on electric to the air handler.
3. Set FAN switch to "ON".

TO TURN OFF THE AIR HANDLER

1. If equipped, set the thermostat to the lowest setting.
2. Set BURNER switch to "OFF".
3. Set FAN switch to "OFF".

IF THE AIR HANDLER WILL NOT OPERATE, FOLLOW THESE INSTRUCTIONS, TO HELP ENSURE YOUR SAFETY

1. If equipped, set the thermostat to the lowest setting.
2. Set BURNER switch to "OFF".
3. Set FAN switch to "OFF".
4. Turn off electric to the air handler.
5. Close the manual gas valve in the air handler supply line.
6. Call your registered contractor qualified in the installation and service of gas-fired heating equipment.

⚠WARNING

Fire Hazard

Keep all flammable objects, liquids and vapors the required clearances to combustibles away from equipment.

Some objects can catch fire or explode when placed close to equipment.

Failure to follow these instructions can result in death, injury or property damage.

CLEARANCES TO COMBUSTIBLES

Clearances to combustibles for Models 2005-2030 are 12" (30.5 cm) on the control enclosure side and 6" (15.2 cm) on all other surfaces.

Clearances to combustibles do not denote clearances for accessibility. Minimum clearance for access is 48" (122 cm) on all models. Minimum clearance for accessibility applies to the control enclosure, blower access panel and filter access panel (when equipped).

Rapid Engineering LLC
1100 Seven Mile Road NW
Comstock Park, MI 49321
Telephone: +1.616.784.0500
Fax: +1.616.784.0435
Toll Free: 800.536.3461

Installation Code and Annual Inspections: All installation and service of RAPID® equipment must be performed by a contractor qualified in the installation and service of equipment sold and supplied by Rapid Engineering LLC and conform to all requirements set forth in the RAPID® manuals and all applicable governmental authorities pertaining to the installation, service, operation and labeling of the equipment. To help facilitate optimum performance and safety, Rapid Engineering LLC recommends that a qualified contractor conduct, at a minimum, annual inspections of your RAPID® equipment and perform service where necessary, using only replacement parts sold and supplied by Rapid Engineering LLC.

Air handlers are approved for installation up to 2000' (610 m).
For installations at elevations above 2000' (610 m), consult factory.

Further Information: Applications, engineering and detailed guidance on systems design, installation and equipment performance is available through RAPID® epresentatives. Please contact us for any further information you may require, including the Installation, Operation and Service Manual.

These products are not for residential use.

© 2016 Rapid Engineering LLC All rights reserved. No part of this work covered by the copyrights herein may be reproduced or copied in any form or by any means – graphic, electronic, or mechanical, including photocopying, recording, taping, or information storage and retrieval systems – without written permission of Rapid Engineering LLC.