⚠ WARNING

FIRE OR EXPLOSION HAZARD


Failure to follow safety warnings exactly could result in serious injury, death or property damage.

Be sure to read and understand the installation, operation and service instructions in this manual.

Improper installation, adjustment alteration, service or maintenance can cause serious injury, death or property damages.

- **Do not store or use gasoline or other flammable vapors and liquids in the vicinity of this or any other appliance.**

WHAT TO DO IF YOU SMELL GAS

- **Do not try to light any appliance.**
- **Do not touch any electrical switch; do not use any phone in your building.**
- **Leave the building immediately.**
- **Immediately call your gas supplier from a phone remote from the building. Follow the gas supplier's instructions.**
- **Installation and service must be performed by a qualified installer, service agency or the gas supplier.**

Weather-Rite™

IDFD-Series

Indirect, Gas Industrial Air Handler

Installation, Operation & Service Manual

IDFD 750
IDFD 1250
IDFD 1500
IDFD 2000
IDFD 2500
IDFD 3000
IDFD 4000
IDFD 5800

⚠ WARNING

Improper installation, adjustment, alteration, service or maintenance can result in death, injury or property damage. Read the installation, operation and service manual thoroughly before installing or servicing this equipment.

Installation must be done by a registered installer/ contractor qualified in the installation and service of gas/oil-fired heating equipment or your fuel supplier.

NOT FOR RESIDENTIAL USE

C ETL LISTED US

Intertek

***5800 Cabinet Size Not ETL Listed. Consult Factory for Details**

© 2018 Weather-Rite

Installer

Please take the time to read and understand these instructions prior to any installation. Installer must give a copy of this manual to the owner.

Owner

Keep this manual in a safe place in order to provide your service technician with necessary information.

Weather-Rite
1100 Seven Mile Road NW
Comstock Park, MI 49321
Telephone: +1.612.338.1401
Fax: +1.616.784.0435

www.weather-rite.com

P/N WR131100NA Rev G 5/18

⚠ AVERTISSEMENT

RISQUE D'INCENDIE OU D'EXPLOSION


Le non-respect des consignes de sécurité peut entraîner des blessures graves, la mort ou des dommages matériels.

Assurez-vous de lire et de comprendre les instructions d'installation, d'utilisation et d'entretien de ce manuel.

Une installation, un réglage, un entretien ou une maintenance incorrects peuvent causer des blessures graves, la mort ou des dommages matériels.

- Ne stockez pas ou n'utilisez pas d'essence ou d'autres vapeurs et liquides inflammables à proximité de cet appareil ou de tout autre appareil.

QUE FAIRE SI VOUS SENTEZ DU GAZ

- **N'essayez pas d'allumer un appareil.**
- **Ne touchez aucun interrupteur électrique; n'utilisez aucun téléphone dans votre immeuble.**
- **Quittez le bâtiment immédiatement.**
- **Appelez immédiatement votre fournisseur de gaz à partir d'un téléphone distant dans le bâtiment. Suivez les instructions du fournisseur de gaz.**

- L'installation et l'entretien doivent être effectués par un installateur qualifié, une agence de service ou un fournisseur de gaz.

Weather-Rite™

IDFD-Series

L'appareil de traitment de l'air à combustion indirecte, au gaz ou à l'huile pour les applications industrielles

Manuel d'installation, d'opération, et d'entretien

IDFD 750
IDFD 1250
IDFD 1500
IDFD 2000
IDFD 2500
IDFD 3000
IDFD 4000

⚠ ATTENTION

L'installation, l'ajustement, l'altération, le démarrage ou l'entretien inadéquat peuvent causer la mort, des blessures ou des dégâts matériels. Lire entièrement le manuel d'installation, d'opération et d'entretien avant l'installation ou l'entretien de cet équipement.

L'installation doit être effectuée par un installateur éprouvé/contractant qualifié dans l'installation et la maintenance du système de chauffage par infrarouge activé au gaz.

Installateur

Prenez le temps de lire et comprendre ces instructions avant toute installation.
L'installateur doit remettre au propriétaire un exemplaire de ce manuel.

Propriétaire

Gardez ce manuel dans un endroit sûr pour fournir des informations au réparateur en cas de besoin.

Conçus pour les applications non-résidentielles

C ETL CM LISTED US

Intertek

***5800 Cabinet Size Not ETL Listed. Consult Factory for Details**

Weather-Rite
1100 Seven Mile Road NW
Comstock Park, MI 49321
Téléphone: +1.612.338.1401
Fax: +1.616.784.0435

www.weather-rite.com

P/N WR131100FC Rev G 5/18

© 2018 Weather-Rite

TABLE OF CONTENTS

© 2018 Specified Air Solutions

All rights reserved. No part of this work covered by the copyrights herein may be reproduced or copied in any form or by any means - graphic, electronic, or mechanical, including photocopying, recording, taping or information storage and retrieval systems - without the written permission of Specified Air Solutions.

Printed in U.S.A.

TABLE OF FIGURES

SECTION 1: AIR HANDLER SAFETY

Your Safety is Important to Us! This symbol is used throughout the manual to notify you of possible fire, electrical or burn hazards. Please pay special attention when reading and following the warnings in these sections.

Installation, service and at a minimum, annual inspection of air handler must be done by a contractor qualified in the installation and service of gas-fired heating equipment.

Read this manual carefully before installation, operation or service of this equipment.

This air handler is designed for heating non-residential indoor spaces. Do not install in residential spaces. These instructions, the layout drawing, local codes and ordinances and applicable standards that apply to fuel piping, electrical wiring, ventilation, etc. must be thoroughly understood before proceeding with the installation.

Protective gear is to be worn during installation, operation and service. Thin sheet metal parts, including various venting components, have sharp edges. To prevent injury, the use of work gloves is recommended.

Before installation, check that the local distribution conditions, nature of fuel and pressure and adjustment of the appliance are compatible.

This equipment must be applied and operated under the general concepts of reasonable use and installed using best building practices.

This appliance is not intended for use by persons (including children) with reduced physical, sensory or mental capabilities, or lack of experience and knowledge, unless they have been given supervision or instruction concerning use of the appliance by a person responsible for their safety.

Children should be supervised to ensure that they do not play with the appliance.

For additional copies of the Installation, Operation and Service Manual, please contact Weather-Rite.

Gas appliances are not designed for use in atmospheres containing flammable vapors, flammable dust or chlorinated or halogenated hydrocarbons. Recirculated room air may be hazardous if containing flammable solids, liquids, and gases; explosive materials; and/or substances which may become toxic when exposed to heat (i.e. refrigerants, aerosols, etc.).

1.1 Description of Operation

This air handler is an indirect gas appliance. It can be designed for indoor or outdoor installation. Air handlers are designed to operate in temperatures as low as -30 °F (-34 °C). The air handler is factory-tested to fire either with natural gas or LPG (check the air handler's rating plate for information on the appropriate fuel). The burner will operate to maintain discharge air temperature, room/space air temperature, or return air temperature depending on the selected controls. *See Page 59, Section 18*.

The air handler may be provided with several different controls and options to meet various application requirements. Be sure to read this entire manual before installation and start-up.

1.2 Inspection and Setup

The air handler is shipped in multiple sections based on the configuration selected. The air handler was inspected and operated prior to shipment. Immediately upon receipt of the air handler, check the fuel and electrical characteristics of the air handler and verify that they match the fuel and electrical supply available. Verify that the specifications on the air handler rating plate match your order. Check the air handler for any damage that may have occurred during shipment. If any damage is found, file a claim with the transporting agency. Do not refuse shipment. Check the installation location to ensure proper clearances to combustibles. *See Page 6, Section 3.1*.

Any small options which do not come attached to the air handler (i.e. remote panel or disconnect) will be found inside the air handler.

Larger accessories (i.e. stand and filter section) may either ship with the air handler or separately on another truck. Check the bill of lading for information.

If the air handler must be temporarily stored (i.e. job site is not ready for installation of the air handler), the air handler should be set on 4" x 4" (10 cm x 10 cm) pieces of timber on the ground in a protected area. The air handler should be covered to be protected from the environment.

1.3 Safety Labels and Their Placement

Product safety signs or labels should be replaced by product user when they are no longer legible. Please contact Weather-Rite or your WEATHER-RITE™ independent distributor to obtain replacement signs or labels. *See Page 3, Figure 1.5*.

1.4 California Proposition 65

In accordance with California Proposition 65

requirements, a warning label must be placed in a highly visible location on the outside of the equipment (i.e., near equipment's serial plate). See label placement drawings *on Page 3, Figure 1.5* for label location. Avoid placing label on areas with extreme heat, cold, corrosive chemicals or other elements. To order additional labels, please contact Weather-Rite or your WEATHER-RITE™ independent distributor.

1.5 Label Placement

FIGURE 1: Label Placement

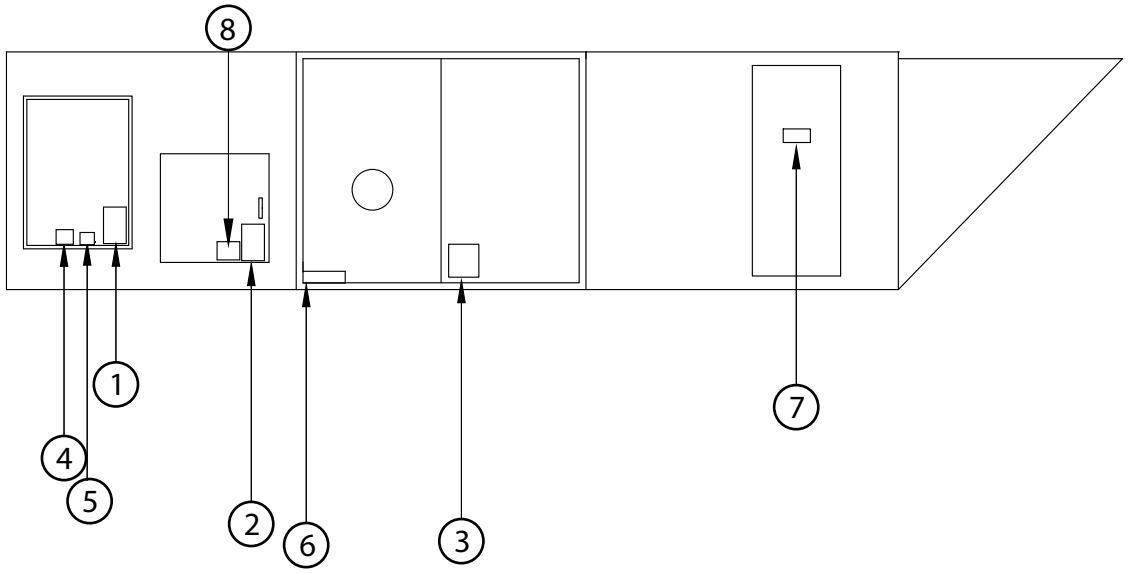

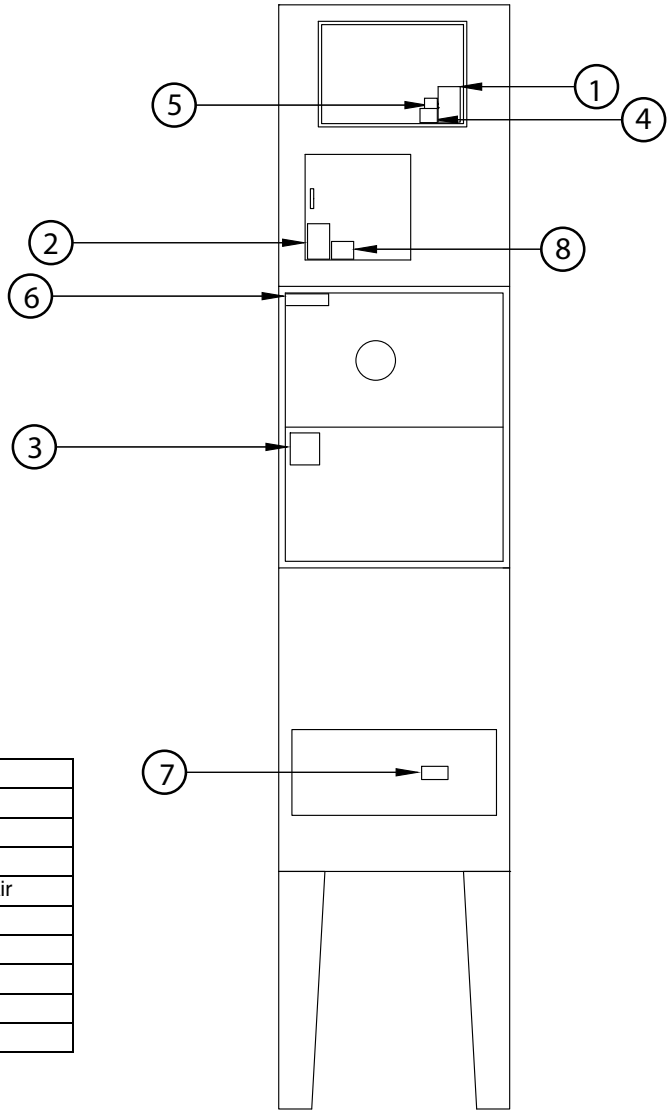

Item	Part Number	Description
1	91070001	Danger Electrical Shock Hazard
2	91070002	Severe Injury Hazard Vertical
3	91070051	Warning Burn, Fall, Fire Hazard
4	91070016	Warning Proposition 65 Label- Warm Air
5	91070431	Vent to Outdoors
6	91010431A	Improper Install Warning
7	91010456	Filter Replacement
7	91010459	Filter Replacement
8	91010458	Motor and Bearing Grease Schedule

SECTION 2: INSTALLER RESPONSIBILITY

⚠ WARNING

Explosion Hazard

Equipment must have access to uncontaminated air at all times.

Failure to follow these instructions can result in death, injury or property damage.

The installer is responsible for the following:

- To install and commission the air handler, as well as the fuel and electrical supplies, in accordance with applicable specifications and codes. Weather-Rite recommends the installer contact a local building inspector or Fire Marshal for guidance.
- To use the information given in a layout drawing and in the manual together with the cited codes and regulations to perform the installation.
- To furnish all needed materials not furnished as standard equipment.
- To plan location of supports.
- To provide access to air handler for servicing.
- To provide the owner with a copy of this Installation, Operation and Service Manual.
- To ensure there is adequate air circulation around the air handler and to supply air for combustion, ventilation and distribution in accordance with local codes. The burners used on the air handlers require pressure-neutral air for proper combustion and performance. A burner's combustion air should not be attempted to be pulled from a negative air pressure environment. To avoid creating a negative pressure environment in a well-sealed space, there should be a fresh air penetration in the wall or roof of the space of a minimum size equivalent to 0.5 sq in (3.2 sq cm) per 1,000 Btu/h (293.1 kW) input capacity of equipment in the space. For information on pulling combustion air from outside of the unit's immediate vicinity, *See Section 15.3*.
- To assemble or install any accessories or associated duct work using best building practices.
- To properly size supports and hanging materials.

2.1 Corrosive Chemicals

⚠ CAUTION

Product Damage Hazard

Do not use equipment in area containing corrosive chemicals.

Refer to appropriate Material Safety Data Sheets (MSDS).

Failure to follow these instructions can result in product damage.

Weather-Rite cannot be responsible for ensuring that all appropriate safety measures are undertaken prior to installation; this is entirely the responsibility of the installer. It is essential that the contractor, the sub-contractor, or the owner identifies the presence of combustible materials, corrosive chemicals or halogenated hydrocarbons* anywhere in the premises.

** **Halogenated Hydrocarbons** are a family of chemical compounds characterized by the presence of halogen elements (fluorine, chlorine, bromine, etc.). These compounds are frequently used in refrigerants, cleaning agents, solvents, etc. If these compounds enter the air supply of the burner, the life span of the air handler components will be greatly reduced. An outside air supply must be provided to the burners whenever the presence of these compounds is suspected. Warranty will be invalid if the air handler is exposed to halogenated hydrocarbons.*

2.2 Required Equipment and Materials

When lifting of the equipment is required, the installing contractor is responsible for supplying or arranging for the appropriate lifting equipment so that the air handler and accessories may be placed in a safe manner.

The qualified installing / service technician is responsible for having the appropriate equipment and materials for the safe installation and start-up of an indirect-fired air handler. Tools and materials required to commission the equipment include, but are not limited to, the following:

- Various screwdriver types and sizes
- Various adjustable wrenches
- Torque wrenches
- Pipe wrenches sized appropriately for the gas train components
- Drill motor and various drills
- U-tube manometer 0 to 6" wc (0 to 14.9 mbar)
- Gas pressure gauge 0 to 30" wc (0 to 74.7 mbar)
- Gas pressure gauge to suit building supply pressure conditions
- Combustion analyzer
- Stack thermometer
- Volt meter
- Clamp style ammeter
- Belt tension gauge
- Paintable latex caulk (Do not use silicone caulk)

SECTION 3: CRITICAL CONSIDERATIONS

⚠ WARNING

Fire Hazard

Keep all flammable objects, liquids and vapors the minimum required clearances to combustibles away from equipment.

Some objects will catch fire or explode when placed close to equipment.

Failure to follow these instructions can result in death, injury or property damage.

3.1 Required Clearances to Combustibles

Clearances are the required distances that combustible objects must be away from the air handler to prevent fire hazards. Combustibles are materials that may catch on fire and include common items such as wood, paper, rubber, fabric, etc. **Maintain clearances to combustibles at all times for safety.**

Check the clearances on each air handler being installed to make sure the product is suitable for your application and the clearances are maintained.

Minimum clearances for all models are as follows:

- 18" (45.7 cm) Above the top of the equipment
- 18" (45.7 cm) Along the sides of the equipment
- 36" (91.4 cm) Around the flue pipe
- 36" (91.4 cm) Around the sight port
- 18" (45.7 cm) From the base rail of the equipment (when suspended) or installed on combustible floor.

Read and follow the safety guidelines below:

- Locate the air handler so that the air intakes are not too close to any exhaust fan outlets, gasoline storage, propane tanks or other contaminants that could potentially cause dangerous situations.
- Keep gasolines or other combustible materials including flammable objects, liquids, dust or vapors away from this air handler or any other appliance.
- Maintain clearances from heat sensitive material, equipment and workstations.

Clearances to combustibles do not denote clearances for accessibility. Minimum clearance for access is 48" (122 cm). Minimum clearance for accessibility applies to the control enclosure, blower access panel and filter access panel (when equipped). Minimum clearance for accessibility when replacing the heat exchanger is equal to the width of the unit.

The stated clearances to combustibles represent a surface temperature of 90 °F (32 °C) above room temperature. Building materials with a low heat tolerance (i.e. plastics, vinyl siding, canvas, tri-ply, etc.) may be subject to degradation at lower temperatures. It is the installer's responsibility to assure that adjacent materials are protected from degradation. Maintain clearances from heat sensitive material, equipment and workstations.

- Maintain clearances from vehicles parked below. *See Page 7, Section 4.4*.

Inlet hood opening shall not be installed with inlet opening facing into the prevailing wind direction in order to help prevent the possibility of moisture entrainment.

3.2 Hardware

Unless otherwise specified, all hardware must be torqued to settings from *Page 6, Table 1*.

Table 1: Recommended Torque Settings

Bolt Head Grade Marking	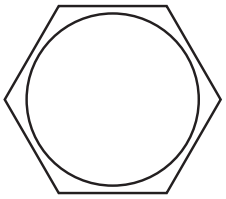	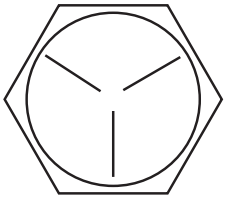
Nut Grade Marking	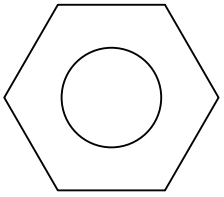	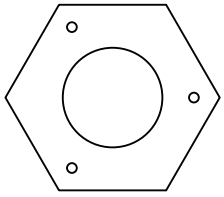
Bolt Size	**Grade 2**	**Grade 5**
10-24	27 in•Lb	42 in•Lb
1/4-20	65 in•Lb	101 in•Lb
5/16-18	11 ft•Lb	17 ft•Lb
3/8-16	19 ft•Lb	30 ft•Lb

SECTION 4: NATIONAL STANDARDS AND APPLICABLE CODES

4.1 Fuel Codes

The type of fuel appearing on the nameplate must be the type of fuel used. Installation must comply with national and local codes and requirements of the local fuel company.

United States: Refer to NFPA 54/ANSI Z223.1 - latest revision, National Fuel Gas Code for natural gas and LPG units.

Canada: Refer to CSA B149.1 - latest revision, Natural Gas and Propane Installation Code for natural gas and LPG units.

4.2 Installation Codes

Installations must be made in accordance with NFPA 90A - latest revision, Standard for the Installation of Air-Conditioning and Ventilation Systems.

4.3 Aircraft Hangars

Installation in aircraft hangars must be in accordance with the following codes:

United States: Refer to Standard for Aircraft Hangars, NFPA 409 - latest revision.

Canada: Refer to Standard CSA B149.1 - latest revision, Natural Gas and Propane Installation Code for natural gas and LPG units.

4.4 Parking Structures and Repair Garages

Installation in garages must be in accordance with the following codes:

United States: Standard for Parking Structures NFPA 88A - latest revision or the Code for Motor Fuel Dispensing Facilities and Repair Garages, NFPA 30A - latest revision.

Canada: Refer to CSA B149.1 - latest revision, Natural Gas and Propane Installation Code for natural gas and LPG units.

4.5 Electrical

Electrical connection to air handler must be in accordance with the following codes:

United States: Refer to National Electrical Code®, NFPA 70 - latest revision. Wiring must conform to the most current National Electrical Code®, local ordinances, and any special diagrams furnished.

Canada: Refer to Canadian Electrical Code, CSA C22.1 Part 1 - latest revision.

4.6 Venting

This air handler must be vented in accordance with the requirements within this manual and with the following codes and any state, provincial or local codes which may apply:

United States: Refer to NFPA 54/ANSI Z223.1- latest revision, National Fuel Gas Code for natural gas and LPG units.

Canada: Refer to CSA B149.1 - latest revision, Natural Gas and Propane Installation Code for natural gas and LPG units.

4.7 High Altitude

These air handlers are approved for installations up to 2000' (609.6 m) (US), 4500'(1371.6 m) (Canada) without modification. Consult factory if US installation is above 2000' (609.6 m) or Canadian installation is above 4500’(1371.6 m).

SECTION 5: SPECIFICATIONS

Heat exchanger shall be a multi-pass design with a primary firing drum and tubular secondary. Materials for primary and secondary heat exchanger are(304 SS, 409SS). The primary heat exchanger, collector boxes and headers are constructed of 16 gauge (.057) minimum thickness. Secondary heat exchanger is constructed of 18 gauge (.047) minimum material. Tubing used for the heat exchanger shall comply with (ASTM A268 for 409SS, ASTM 249 for #)$SS). Secondary tubes shall be swaged into panels welded to provide an air tight assembly.

FIGURE 2: Horizontal, Vertical and Plenum Fan Dimensions

Horizontal Unit

NOTE: See right page for horizontal plenum fan section dimensions.

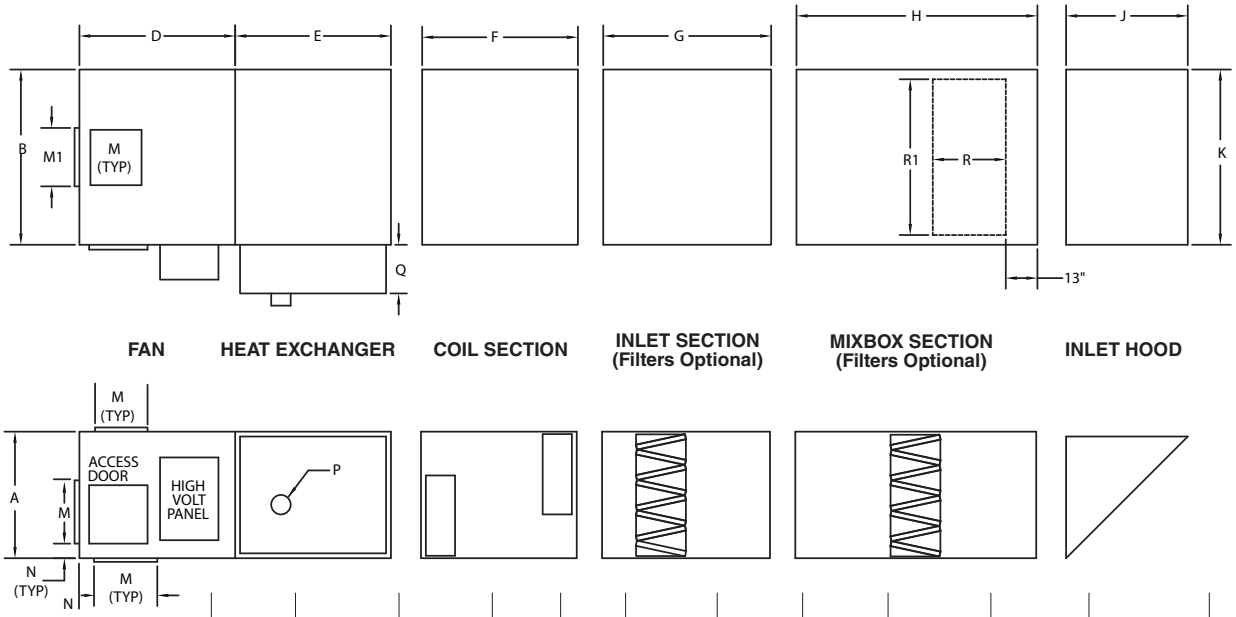

Model	Standard Fan	Single Plenum Fan	Double Plenum Fan	A Height (in)	B Width (in)	D Standard Fan Length	D Plenum Fan Length	D1 Transition	E HEX Length	F Coil Section Length	G Filter Section Length	H Mix Box Length
IDFD-750	920-18C 922C	ANPA 18		52	72	66	50	40	64	64	69	109
IDFD-1250	920-18C 922C 925C	ANPA 20 ANPA 22 ANPA 25		57	78	72.00	55	40	76	76	69	113
IDFD-1500	920-18C 922C 925C 930C 936C	ANPA 25 ANPA 28 ANPA 32		69	110	87.25	64	58	70	70	69	110
8500D-2000	922C 925C 930C 936C	ANPA 25 ANPA 28 ANPA 32	ANPA 20 ANPA 22 ANPA 25	69	120	87.25	64	63	86	86	69	117
IDFD-2500	922C 925C 930C 936C	ANPA 28 ANPA 32	ANPA 22 ANPA 25	69	120	87.25	64	66	90	90	69	117
IDFD-3000	925C 930C 936C	ANPA 32	ANPA 25	69	120	87.25	64	60	122	122	69	117
IDFD-4000	930C 936C		ANPA 25 ANPA 28 ANPA 32	69	160	100	100	44	122	122	69	113
IDFD-5800	930C 936C		ANPA 28 ANPA 32	69	160	100	100	44	86	86	69	113

FIGURE 3: Horizontal, Vertical and Plenum Fan Dimensions

Vertical Unit

NOTE: See image on the right for vertical plenum fan section dimensions.

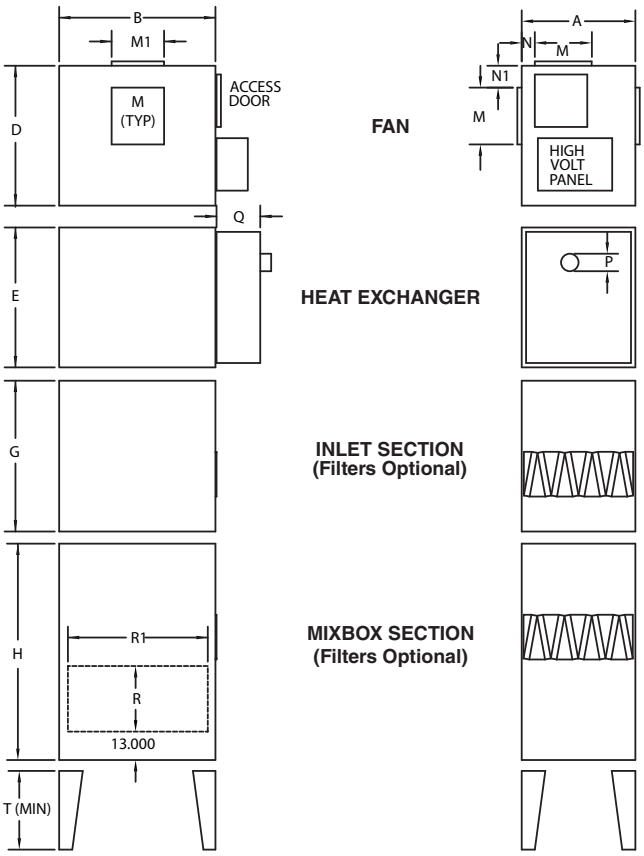

Vertical Plenum Fan Section

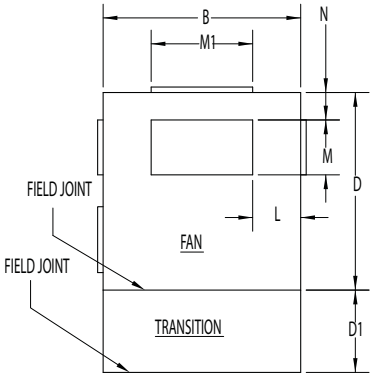

Horizontal Plenum Fan Section

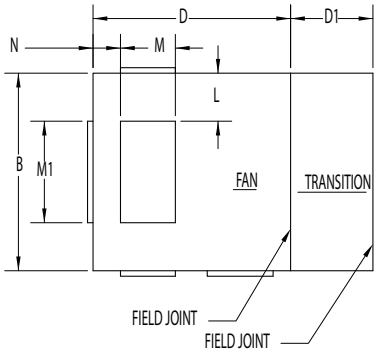

J IH Length	K IH Width	L Standard	L Plenum	MxM1 Standard	MxM1 Plenum	N Standard	N Plenum	N1 Top & Bottom	P Exhaust Diameter	Q Enclosure Depth	RxR1 RA Size	S Minimum Leg Height (Vertical Unit Only)
		Discharge Location		Fan Discharge Opening		Discharge Location						
54	72	23.63 22.13	24	24.75x22.75 27.25x27.25	20x24	14.25 15.25	16	11.25 12.25	10	30	40x48	36
53	75	26.63 25.13 23.38	15 15 15	24.75x22.75 27.25x27.25 31.25x31.25	30x48 30x48 30x48	14.25 15.25 16.5	16	11.25 12.25 13.5	10	30	44x54	36
76	100	46.63 41.38 39.38 36.63 33.53	25 25 25	24.75x22.75 27.25x27.25 31.25x31.25 36.75x36.75 42.94x42.94	48x60 48x60 48x60	14.25 15.25 16.5 19.75 17.81	16	11.25 12.25 13.5 16.75 14.81	12	30	41x96	48
71	120	46.38 44.38 41.63 38.53	30 30 30	27.25x27.25 31.25x31.25 36.75x36.75 42.94x42.94	48x60 48x60 48x60	15.25 16.5 19.75 17.81	16	12.25 13.5 16.75 14.81	12	30	48x96	48
71	120	46.38 44.38 41.63 38.53	30 30	27.25x27.25 31.25x31.25 36.75x36.75 42.94x42.94	48x60 48x60	15.25 16.5 19.75 17.81	16	12.25 13.5 16.75 14.81	14	32	48x96	60
71	120	44.38 41.63 38.53	30	31.25x31.25 36.75x36.75 42.94x42.94	48x60	16.5 19.75 17.81	16	13.5 16.75 14.81	14	32	48x96	60
76	150	61.63 58.53	50 50 50	36.75x36.75 42.94x42.75	84x63 84x63 84x63	19.75 17.81	10	16.75 14.81	14	32	44x116	60
76	150	61.63 58.53	48.5 48.5	36.75x36.75 42.94x42.94	84x63 84x63	19.75 17.81	10	16.75 14.81	14	38	44x116	60

Table 2: Unit Selection Weights

Model		Fan Section	Heat Exchanger Section	Coil Section	Filter Section	Mixbox Section	Inlet Hood
750	**(lb)**	1223	2106	1337	973	1302	285
1250	**(lb)**	1432	2475	1508	1038	1391	322
1500	**(lb)**	1958	2804	1709	1111	1473	340
2000	**(lb)**	2075	3517	2017	1374	1633	408
2500	**(lb)**	2201	4202	2422	1689	2004	450
3000	**(lb)**	2297	4996	2833	2082	2465	455
4000	**(lb)**	2444	6113	3361	2580	3047	462
5800	**(lb)**	2516	6764	3968	2581	3041	482

NOTE: Weights for units with platforms not included. Weights are estimates and subject to change without notice.

Table 3: Motor Weights

Size	**(HP)**	1.00	1.50	2.00	3.00	5.00	7.50	10.00	15.00	20.00	25.00	30.00	40.00	50.00	60.00
	(kW)	0.75	1.10	1.50	2.20	3.70	5.50	7.50	11.00	15.00	19.00	22.00	30.00	37.00	45.00
Weight	**(lb)**	35.0	45.0	45.0	70.0	85.0	130.0	155.0	220.0	275.0	300.0	360.0	500.0	550.0	800.0
	(kg)	15.9	20.4	20.4	31.8	38.6	59.0	70.3	99.8	124.7	136.1	163.3	226.8	249.5	362.9

Table 4: Model Number and Capacity - Forward Curve Fan

Model	Heat Output				Heat Input				Forward Curve Fan (max size)	Airflow				Flue Diameter	
	Minimum		Maximum		Minimum		Maximum			Minimum		Maximum			
	Btu/h	kW	Btu/h	kW	Btu/h	kW	Btu/h	kW		CFM	m^3/h	CFM	m^3/h	in	cm
750	129,600	38	760,000	223	162,000	47	950,000	278	922C	5,000	8,495	22,500	38,228	10	25.40
1250	181,440	53	1,120,000	328	226,800	66	1,400,000	410	925C	7,000	11,893	29,000	49,271	10	25.40
1500	285,120	84	1,200,000	352	356,400	104	1,500,000	440	936C	11,000	18,689	46,000	78,155	12	30.48
2000	362880	106	1,600,000	469	453,600	133	2,000,000	586	936C	14,000	23,786	48,000	81,553	12	30.48
2500	492,480	144	1,920,000	563	615,000	180	2,400,000	703	936C	19,000	32,281	58,000	98,543	14	35.56
3000	596,160	175	2,400,000	703	745,200	218	3,000,000	879	936C	23,000	39,077	54,000	91,747	14	35.56
4000	725,760	213	4,000,000	1,172	907,200	266	5,000,000	1,465	936C	28,000	47,572	60,000	101,941	14	35.56

Table 5: Model Number and Capacity - Plenum Fan

Model	Heat Output				Heat Input				Plenum Fan (max size)	Airflow				Flue Diameter	
	Minimum		Maximum		Minimum		Maximum			Minimum		Maximum			
	Btu/h	kW	Btu/h	kW	Btu/h	kW	Btu/h	kW		CFM	m^3/h	CFM	m^3/h	in	cm
750	77,760	23	760,000	223	97,200	28	950,000	278	ANPA 18	3,000	5,097	5,000	8,495	10	25.40
1250	155,520	46	1,120,000	328	194,400	57	1,400,000	410	ANPA 25	6,000	10,194	15,000	25,485	10	25.40
1500	259,200	76	1,200,000	352	324,000	95	1,500,000	440	ANPA 32	10,000	16,990	30,000	50,970	12	30.48
2000	259,200	76	1,600,000	469	324,000	95	2,000,000	586	ANPA 32	10,000	16,990	30,000	50,970	12	30.48
2500	259,200	76	1,920,000	563	324,000	95	2,400,000	703	ANPA 32	10,000	16,990	30,000	50,970	14	35.56
3000	259,200	76	2,400,000	703	324,000	95	3,000,000	879	ANPA 32 (2)	10,000	16,990	60,000	101,941	14	35.56
4000	259,200	76	4,000,000	1172	324,000	95	5,000,000	1465	ANPA 32 (2)	10,000	16,990	60,000	101,941	14	35.56

*Consult Factory for Plenum Fan Internal Static Pressure.

Table 6: Component-Specific Internal Static Pressure Table

Model	Max CFM	Forward Curve	HEX Section	Filter Section	Mixbox Section	Inlet Hood/ Mist Limiter	Inlet Damper	Cooling Coil Max CFM	Cooling Coil
750	22500	0.1	0.89	0.49	0.60	0.06	0.11	15000	0.82
1250	29000	0.1	1.04	0.46	0.57	0.05	0.11	19250	0.85
1500	46000	0.1	0.81	0.42	0.53	0.06	0.11	31000	0.82
2000	48000	0.1	1.08	0.41	0.49	0.05	0.08	37500	0.81
2500	58000	0.1	1.02	0.46	0.58	0.08	0.12	38250	0.83
3000	54000	0.1	1.02	0.40	0.51	0.07	0.11	44000	0.81
4000	60000	0.1	0.70	0.47	0.58	0.05	0.11	57000	0.74
5000	60000	0.1	1.00	0.47	0.58	0.05	0.11	49500	0.83

Fan Size	Pressure Drop
920-18	0.21
922	0.22
925	0.22
930	0.21
936	0.22

SECTION 6: RIGGING AND ASSEMBLY

⚠ WARNING

Crush Hazard

Use proper lifting equipment and practices.

Failure to follow these instructions can result in death, injury or property damage.

The air handler must be installed in compliance with all applicable codes. The qualified installer or service technician must use best building practices when installing the air handler and any optional equipment.

IMPORTANT: Four eye bolts are provided with each vertical air handler. These eye bolts are to be used when lifting the air handler for placement on the provided support legs. DO NOT Install the support legs prior to lifting the air handler, damage to the legs and /or air handler may occur.

6.1 Lifting an Air Handler

Prior to lifting the air handler, the following steps must be performed:

1. Remove all packaging or banding that attached the air handler to the skid and ensure that the air handler is no longer bound to a skid or truck bed.
2. Remove all packaging or blockers.
3. Remove all of the accessories or packages that were shipped on the same skid, inside the air handler, or inside the control enclosure.
4. Inspect the air handler to:
   - Verify that there is no damage as a result of shipping.
   - Ensure that it is appropriately rated for the utilities available at the installation site.
   - Verify that the eye bolts (lifting lugs) are intact, undamaged and secured to the air handler.
   - Ensure factory-installed hardware is torqued to appropriate setting.
5. Prepare the installation location to be ready to accept the air handler (i.e. roof curb or legs).

Verify that the lifting equipment can handle the air handler's weight and the required reach. See *Page 10* for air handlers weight.

6.1.1 Lifting a Horizontal Air Handler

FIGURE 4: Lifting a Horizontal Air Handler with Options

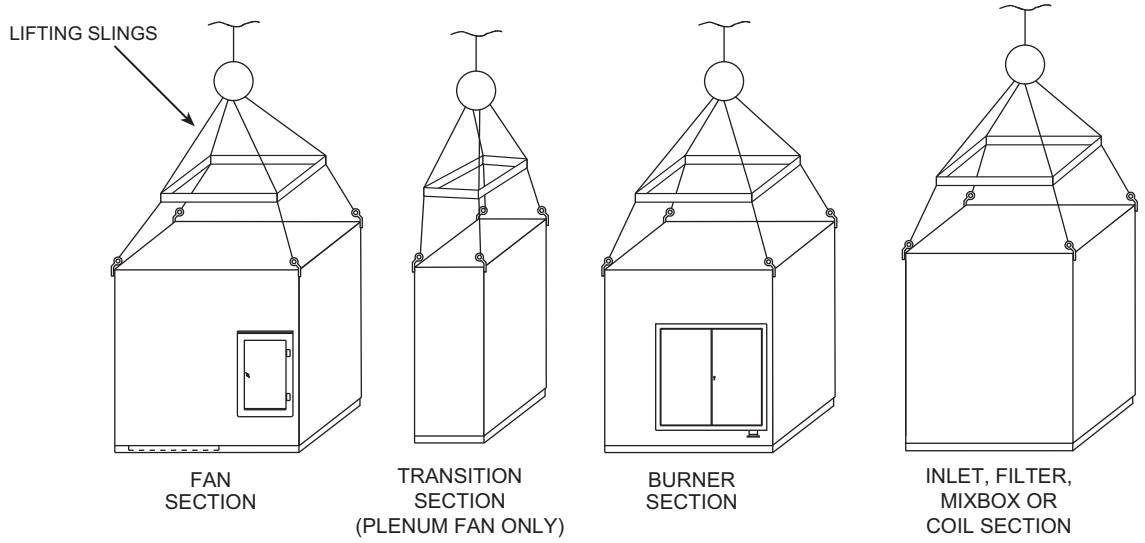

6.1.2 Lifting an Vertical Air Handler

FIGURE 5: Rotating a Section for a Vertical Air Handler

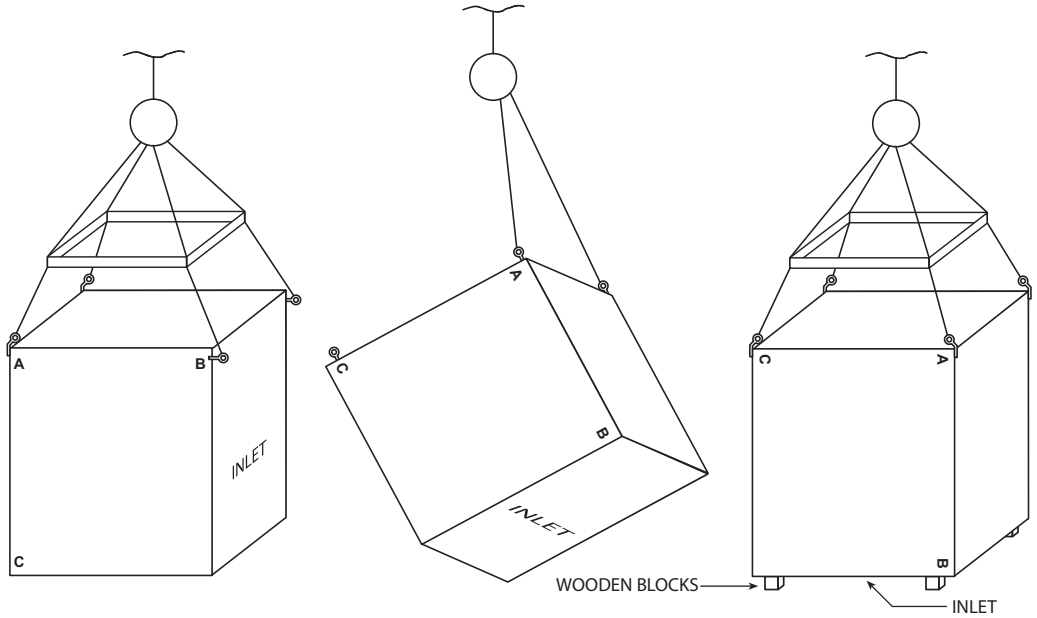

Shipping Position:

1. Attach crane sling hooks to eye bolts A & B (4 places.)
2. Lift off truck.
3. Place on a clean flat dry surface free from water, mud, etc.

Turning Position:

4. Remove eye bolts B. (2 places)
5. Attached eye bolts from B to corner C (2 places.)
6. Attach crane sling hook to A eye bolts A (2 places.)
7. Slowly raise and rotate 90 degrees to Vertical Position.
8. Place air handler section on 4" (10.2 cm) wooden blocks.
9. Attach crane sling hooks to eye bolts A & C (4 places).
10. Air handler/section is now ready to be lifted into place.

NOTE: On fan sections lifting lugs are welded on supply air end.

6.2 Leg Assembly and Locations

⚠ WARNING

Crush Hazard	Falling Hazard	Severe Injury Hazard	Cut/Pinch Hazard
Use proper lifting equipment and practices.	**Use proper safety equipment and practices to avoid falling.**	**Use proper lifting practices and equipment.** **Equipment and accessories are heavy.**	**Wear protective gear during installation, operation and service.** **Edges are sharp.**

Failure to follow these instructions can result in death, injury or property damage.

FIGURE 6: Pad Locations

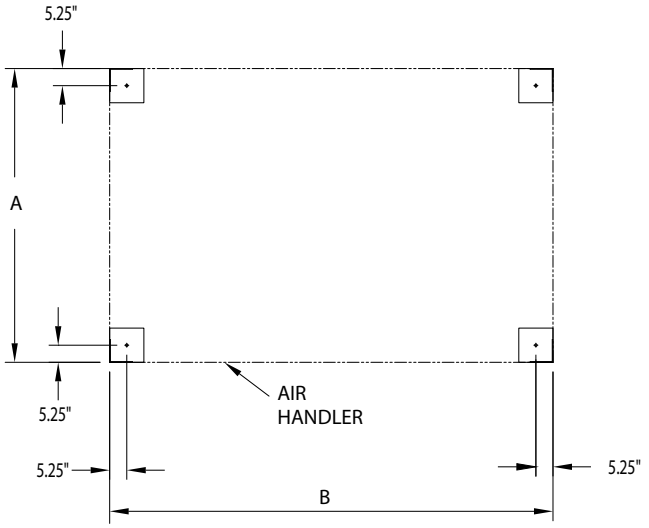

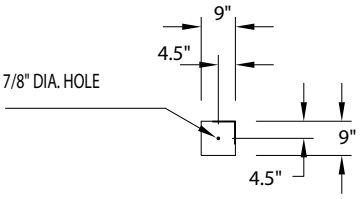

CORNER LEG PAD DETAIL

SIZE	A	B
750	52	72
1250	57	78
1500	69	110
2000	69	120
2500	69	120
3000	69	120
4000	69	160
5800	69	160

NOTES:

(1) ALL DIMENSIONS AND WEIGHTS ARE SUBJECT TO CHANGE WITHOUT NOTICE AND SHOULD NOT BE USED FOR CONSTRUCTION UNLESS CERTIFIED.

(2) HOLES ARE LOCATED FROM OUTSIDE EDGE OF AIR HANDLER

FIGURE 7: Pad Locations

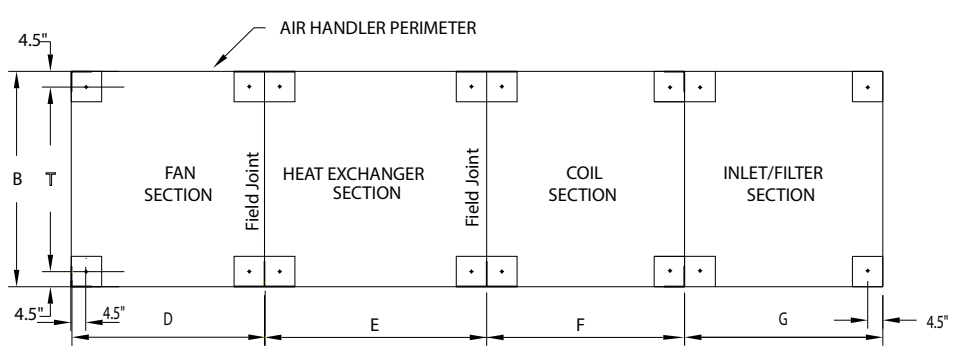

PLAN VIEW LEG PAD LOCATION

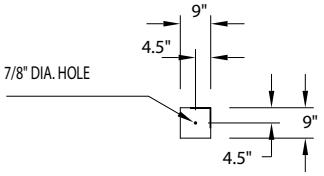

CORNER LEG PAD DETAIL

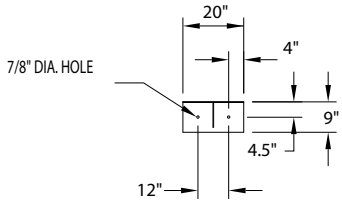

INTERMEDIATE LEG PAD DETAIL

NOTE:
(1) ALL DIMENSIONS AND WIEGHTS ARE SUBJECT TO CHANGE WITHOUT NOTICE AND SHOULD NOT BE USED FOR CONSTRUCTION UNLESS CERTIFIED.
(2) HOLES ARE LOCATED FROM OUTSIDE EDGE OF AIR HANDLER

FC=FORWARD CURVE FAN
P=PLENUM FAN

			(D) FAN TYPE				
SIZE	B	T	P	FC	E	F	G
750	72	62	90	66	64	64	69
1250	78	68	95	72	76	76	69
1500	110	100	122	87.25	70	70	69
2000	120	110	127	87.25	86	86	69
2500	120	110	130	87.25	90	90	69
3000	120	110	124	87.25	120	120	69
4000	160	150	144	100	120	120	69
5800	160	150	144	100	86	86	69

FIGURE 8: Pad Locations

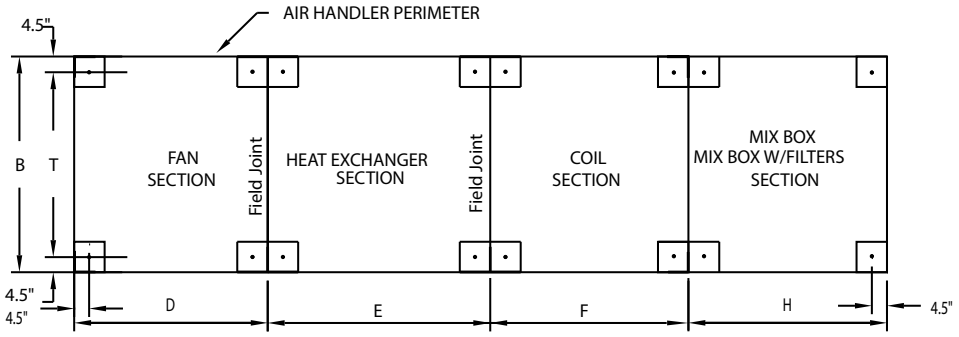

PLAN VIEW LEG PAD LOCATION

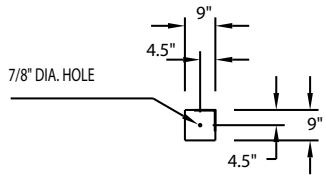

CORNER LEG PAD DETAIL

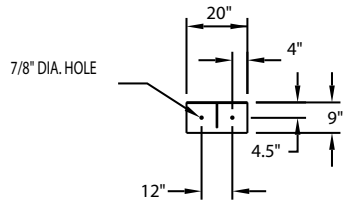

INTERMEDIATE LEG PAD DETAIL

NOTE:
(1) ALL DIMENSIONS AND WIEGHTS ARE SUBJECT TO CHANGE WITHOUT NOTICE AND SHOULD NOT BE USED FOR CONSTRUCTION UNLESS CERTIFIED.
(2) HOLES ARE LOCATED FROM OUTSIDE EDGE OF AIR HANDLER

FC=FORWARD CURVE FAN
P=PLENUM FAN

			(D) FAN TYPE				
SIZE	B	T	P	FC	E	F	H
750	72	62	90	66	64	64	109
1250	78	68	95	72	76	76	113
1500	110	100	122	87.25	70	70	110
2000	120	110	127	87.25	86	86	117
2500	120	110	130	87.25	90	90	117
3000	120	110	124	87.25	120	120	117
4000	160	150	144	100	120	120	113
5800	160	150	144	100	86	86	113

FIGURE 9: Pad Locations

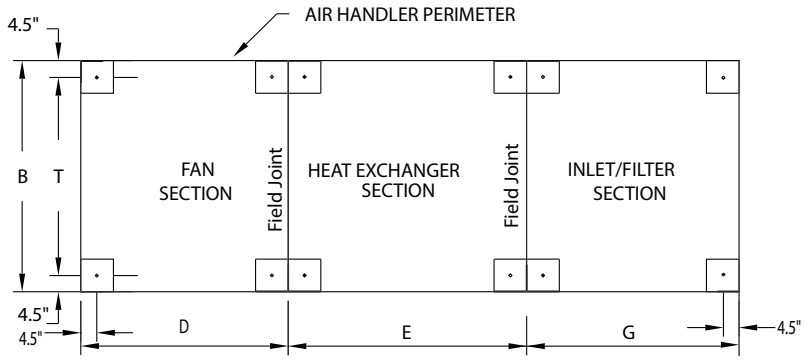

PLAN VIEW LEG PAD LOCATION

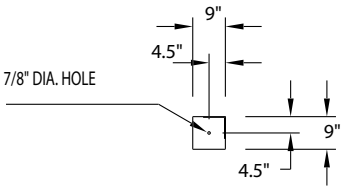

CORNER LEG PAD DETAIL

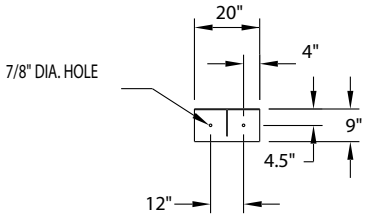

INTERMEDIATE LEG PAD DETAIL

NOTE:
(1) ALL DIMENSIONS AND WIEGHTS ARE SUBJECT TO CHANGE WITHOUT NOTICE AND SHOULD NOT BE USED FOR CONSTRUCTION UNLESS CERTIFIED.
(2) HOLES ARE LOCATED FROM OUTSIDE EDGE OF AIR HANDLER

FC=FORWARD CURVE FAN
P=PLENUM FAN

			(D) FAN TYPE			
SIZE	B	T	P	FC	E	G
750	72	62	90	66	64	69
1250	78	68	95	72	76	69
1500	110	100	122	87.25	70	69
2000	120	110	127	87.25	86	69
2500	120	110	130	87.25	90	69
3000	120	110	124	87.25	120	69
4000	160	150	144	100	120	69
5800	160	150	144	100	86	69

FIGURE 10: Pad Locations

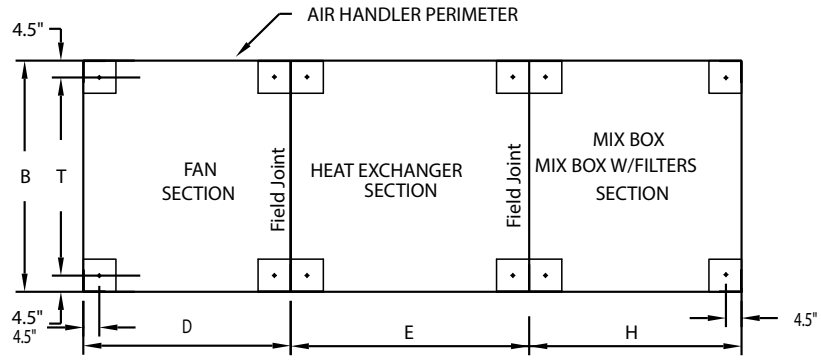

PLAN VIEW LEG PAD LOCATION

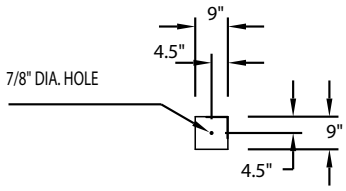

CORNER LEG PAD DETAIL

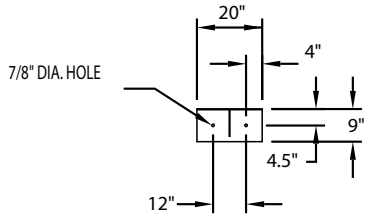

INTERMEDIATE LEG PAD DETAIL

NOTE:
(1) ALL DIMENSIONS AND WIEGHTS ARE SUBJECT TO CHANGE WITHOUT NOTICE AND SHOULD NOT BE USED FOR CONSTRUCTION UNLESS CERTIFIED.
(2) HOLES ARE LOCATED FROM OUTSIDE EDGE OF AIR HANDLER

FC=FORWARD CURVE FAN
P=PLENUM FAN

			(D) FAN TYPE			
SIZE	B	T	P	FC	E	H
750	72	62	90	66	64	109
1250	78	68	95	72	76	113
1500	110	100	122	87.25	70	110
2000	120	110	127	87.25	86	117
2500	120	110	130	87.25	90	117
3000	120	110	124	87.25	120	117
4000	160	150	144	100	120	113
5800	160	150	144	100	86	113

FIGURE 11: Corner Leg Assembly

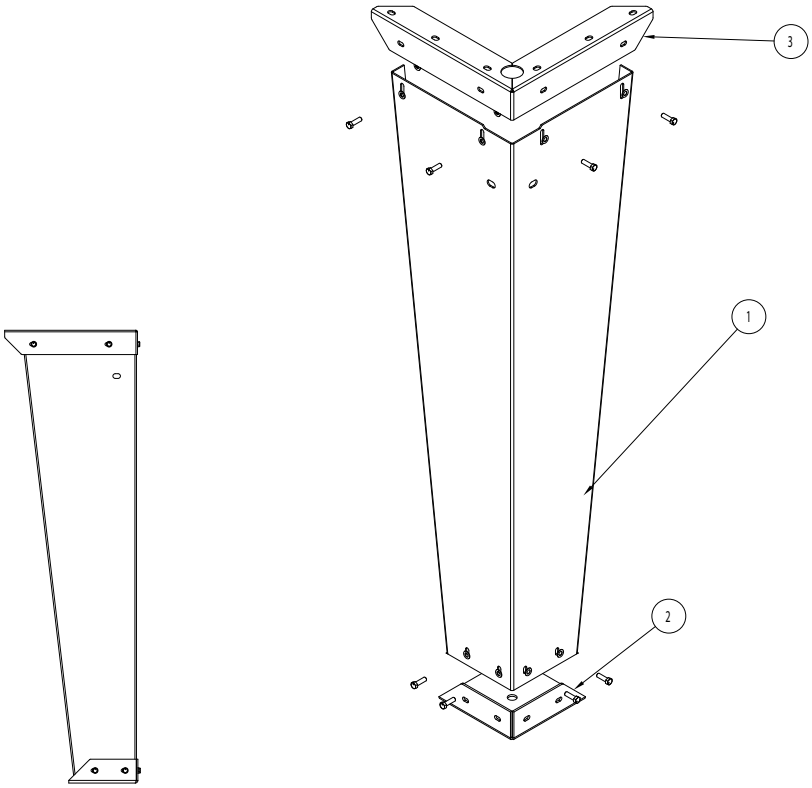

ASSEMBLY OF LEGS IN ACCORDANCE WITH ASSEMBLY INSTRUCTIONS OF UNIT

ITEM	DESCRIPTION
1	LEG, STD 60"
2	BOTTOM PLATE, BOLTED LEG
3	TOP PLATE, BOLTED LEG
4	WASHER, FLAT 3/8
5	SCREW CAP HH 3/8-16NC X 1.250
6	NUT, FLANGE 3/8-16

FIGURE 12: Intermediate Leg Assembly

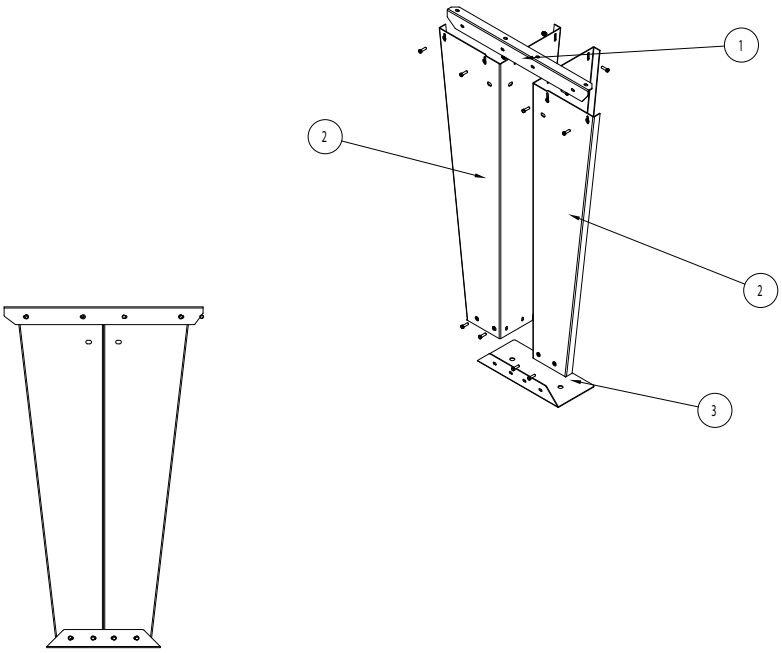

ASSEMBLY OF LEGS IN ACCORDANCE WITH ASSEMBLY INSTRUCTIONS OF UNIT

ITEM NO.	DESCRIPTION
1	TOP PLATE INTERMEDIATE BOLTED
2	LEG, STD 60"
3	BOTTOM PLATE INTERMEDIATE BOLTED
4	WASHER, FLAT 3/8
5	SCREW CAP HH 3/8-16NC X 1.250
6	NUT, FLANGE 3/8-16

FIGURE 13: Vertical Leg Assembly

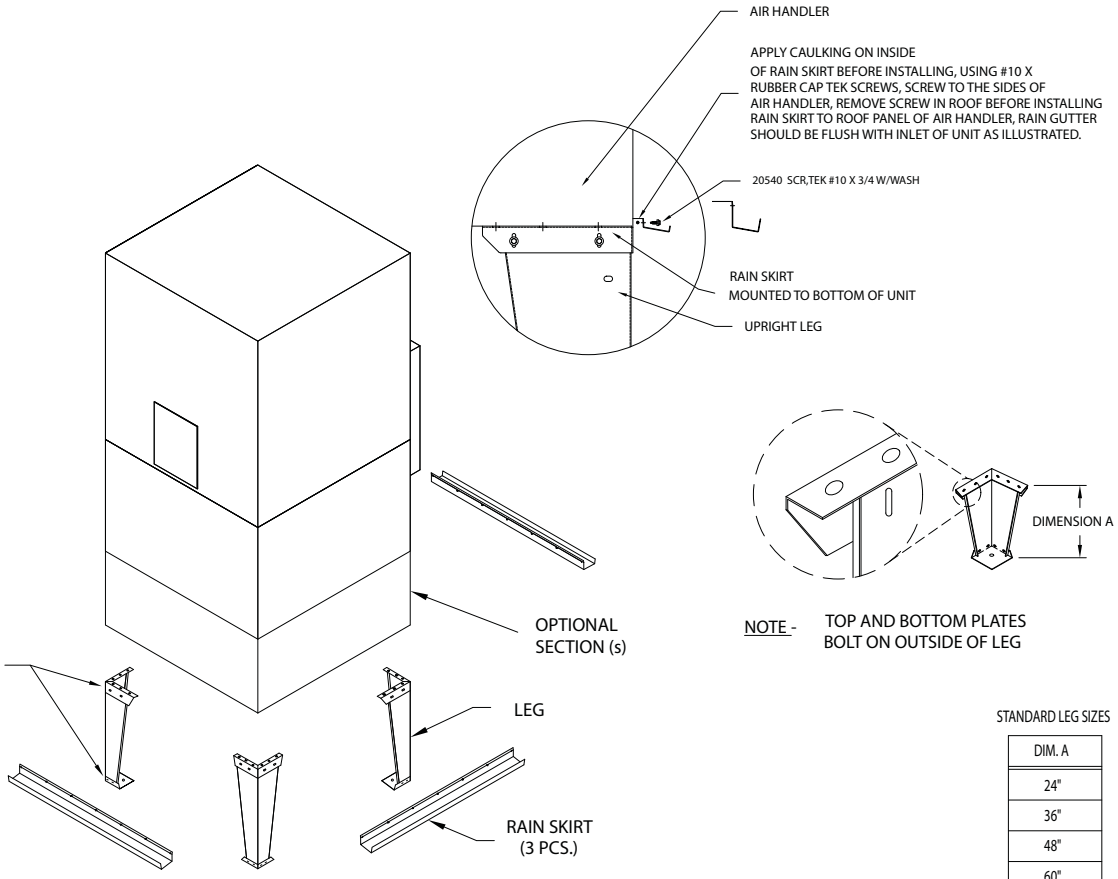

NOTE - TOP AND BOTTOM PLATES BOLT ON OUTSIDE OF LEG

STANDARD LEG SIZES

DIM. A
24"
36"
48"
60"
72"
84"
96"

NOTE: RAIN SKIRT WITH OUTDOOR AIR HANDLERS ONLY
CAUTION, SHORTENING THE LEGS MAY RESULT IN HIGH INLET AIR VELOCITIES, CONSULT THE FACTORY

FIGURE 14: Horizontal Legs Detail

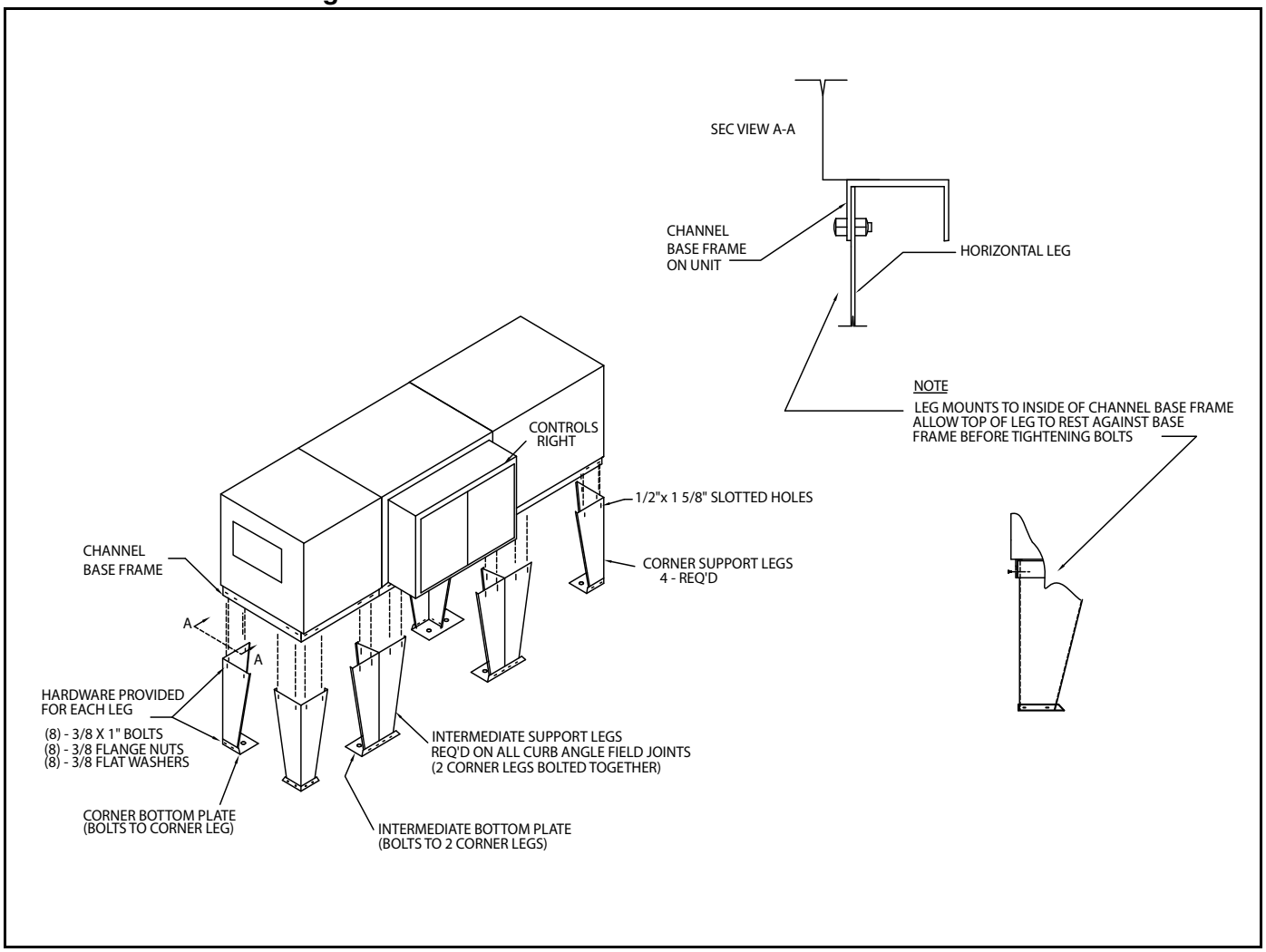

6.3 Caulking Instructions

FIGURE 15: Caulking a Standard Air Handler

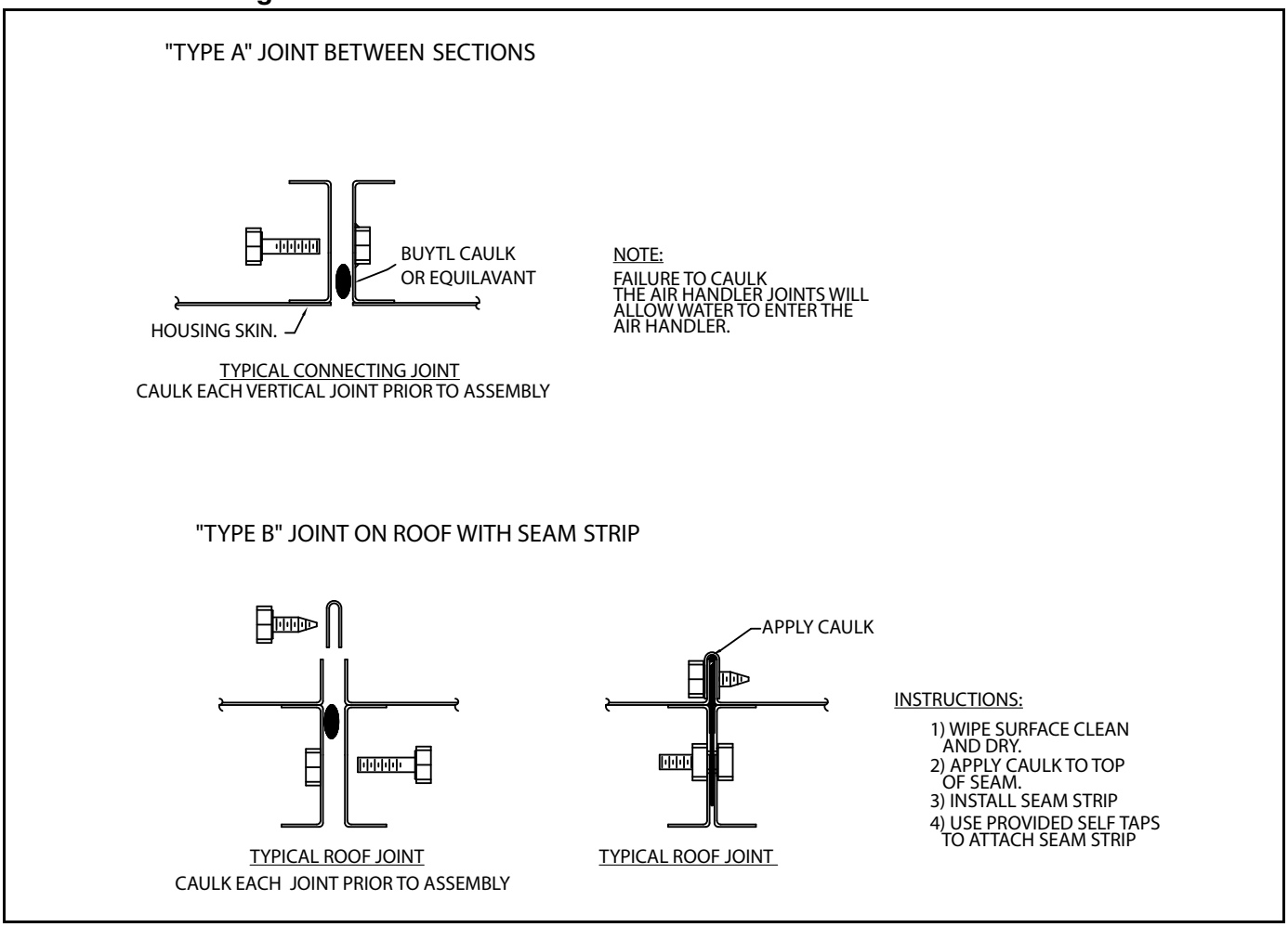

FIGURE 16: Caulking a Standard Horizontal Air Handler

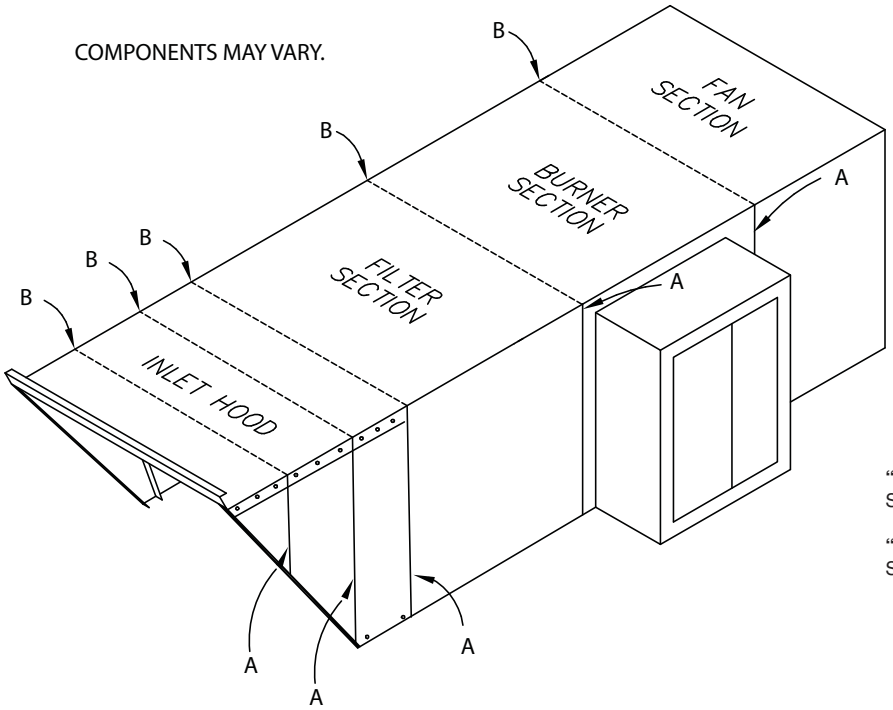

NOTES:
Failure to properly caulk the air handler joints will allow water to enter the air handler.

Caulk supply air/return sleeves as appropriate.

Your individual unit may consist of more, or less, sections than what is shown below - consult the mechanical drawing that was shipped with it.

"A" Type Joint (typical both sides):
Seal with a HEAVY bead of calking/Butyl rope caulk

"B" Type Joint:
Seam strip

FIGURE 17: Caulking a Standard Vertical Air Handler

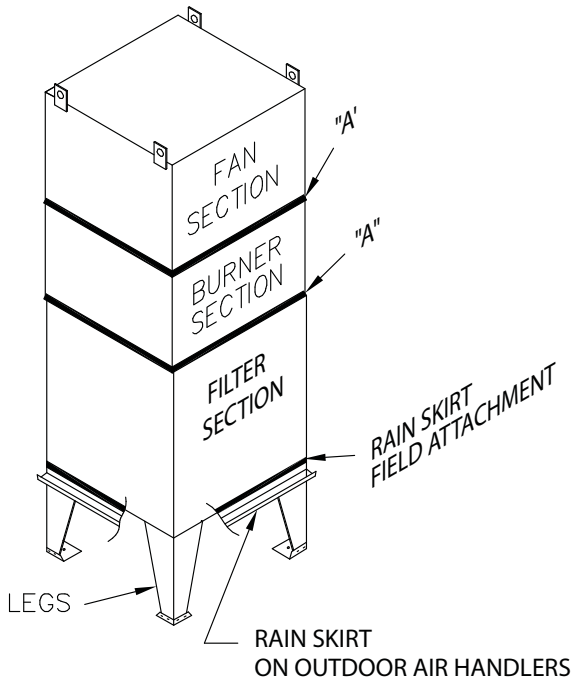

NOTES: Failure to caulk the air handler joints will allow water to enter the air handler.

Your individual unit may consist of more, or less, sections than what is shown below - consult the mechanical drawing that was shipped with it.

6.4 Assembly of an Air Handler

⚠ WARNING

			
Crush Hazard	**Falling Hazard**	**Severe Injury Hazard**	**Cut/Pinch Hazard**
Use proper lifting equipment and practices.	**Use proper safety equipment and practices to avoid falling.**	**Use proper lifting practices and equipment.** **Equipment and accessories are heavy.**	**Wear protective gear during installation, operation and service.** **Edges are sharp.**
Failure to follow these instructions can result in death, injury or property damage.			

All models are shipped in sections that require field assembly. Caulk or use butyl tape along face of each section before setting together. To assemble, use the supplied bolts and washers.

-Refer Caulking Instructions

Caulk (provided by others) seams on sides, roof, and bottom once sections are secured together. Horizontal units with seam strips require caulk before securing to unit. Seam strips on horizontal unit required between field installed sections.

FIGURE 18: Assembly of Vertical Air Handler

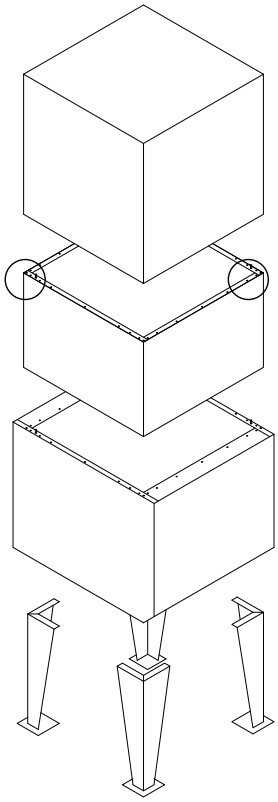

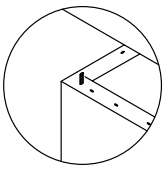

DETAIL - A

NOTE: Your individual unit may consist of more, or less, sections than what is shown below - consult the mechanical drawing that was shipped with it.

Four eye bolts are provided for lifting.

DO NOT assemble an upright airhandler in the horizontal position and then tip upright as leg damage may occur.

Refer to Page 24 Figure

Refer to Page 17 Figure 9 for caulking details.

Installer is responsible for evaluating surface that air handler will be fastened to and determining the correct size and type of anchors to use. All bottom plates are provided with 7/8" anchor holes, however, these are to be enlarged by the installer if necessary for a specific installation.

Steps:
1.) Assemble leg top brackets to base section (inlet section, filter section or filter mixbox section).
2.) Layout bottom plates and fasten to mounting surface.
3.) Attach vertical leg members to bottom plates (NOTE: Do not fully tighten mounting hardware until step 5).
4.) Set base section on top of vertical leg members and securely attach legs to top brackets already fastened to base section in step 1.
5.) While still supporting section with lifting device securely fasten ALL remaining hardware.
6.) Remove lifting eye bolts from base section and move to heat exchanger section.
7.) Install alignment pins in opposite corners in top mating flange of base section (Refer to detail A).
8.) Place heat exchanger section on top of base section using supplied bolts and washers, securely tightening all hardware before proceeding.
9.) Repeat steps 6-8 for remaining section(s).

FIGURE 19: Assembly of a Horizontal Air Handler

NOTE: Your individual unit may consist of more, or less, sections than what is shown below - consult the mechanical drawing that was shipped with it.

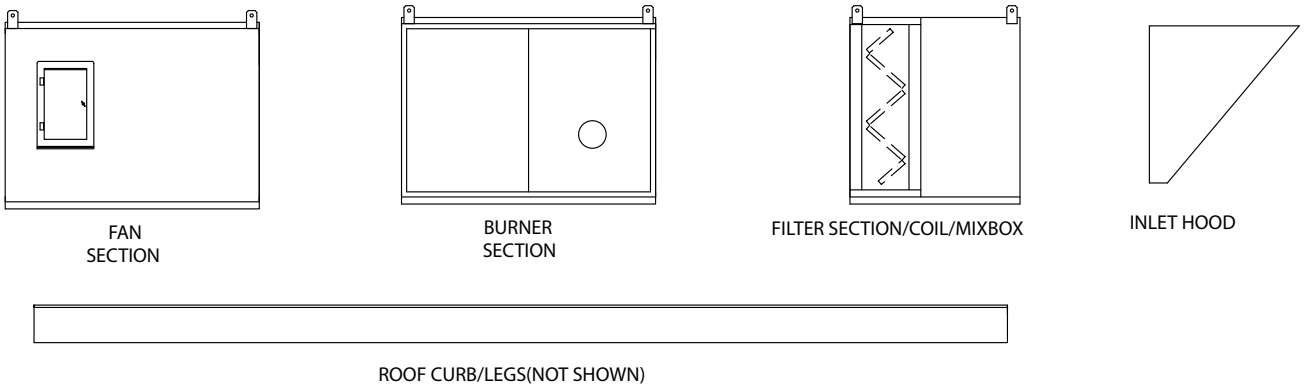

Lifting rings on each section are provided

Refer to Page 20, Section 6.3 for caulking details.

For Leg Mounted Unit:
Installer is responsible for evaluating surface that air handler will be fastened to and determining the correct size and type of anchors to use. All bottom plates are provided with 7/8" anchor holes, however, these are to be enlarged by the installer if necessary for a specific installation.

Steps:
1.) Assemble leg top brackets and intermediate plates to each section.
2.) Layout bottom plates and fasten to mounting surface.
3.) Attach vertical leg members to bottom plates (NOTE: Do not fully tighten mounting hardware until step XX).
4.) Set one section at a time on top of vertical leg members and securely attach legs to top brackets already fastened to base section in step 1.
5.) While still supporting section with lifting device securely fasten ALL remaining hardware.
6.) Follow caulking instructions before placing another section.
7.) Repeat steps 4-6 for all remaining sections.

For Curb Mounted Units:
Assembler is responsible for evaluating wind / seismic conditions at jobsite and fastening air handler to curb as necessary to meet location requirements.

Steps:
1.) Assemble curb according to curb mount instruction (Section 9)
2.) Place Fan section on curb.
3.) Following proper caulking instructions as provided (Section 6.3)
4.) Set heat exchanger section and bolt sections together securely.
5.) Repeat steps 3-4 for all remaining sections.

SECTION 7: VIBRATION ISOLATORS

⚠ WARNING

			
Crush Hazard **Use proper lifting equipment and practices.**	**Falling Hazard** **Use proper safety equipment and practices to avoid falling.**	**Severe Injury Hazard** **Use proper lifting practices and equipment.** **Equipment and accessories are heavy.**	**Cut/Pinch Hazard** **Wear protective gear during installation, operation and service.** **Edges are sharp.**
Failure to follow these instructions can result in death, injury or property damage.			

There are five types of vibration isolators available -

- Waffle pad isolators for curb-mounted units
- Neoprene pad isolators for pad-mounted units
- Neoprene pad isolators for hanger-mounted units
- Spring isolators for hanger-mounted units
- Spring isolators for pad-mounted units.

7.1 Waffle Pad Isolator

The waffle pad is 1 3/4" wide and is provided on a roll. This material is to be cut to fit and placed on top of the roof curb mounting surfaces. (*See Page 24, Figure 20*). This is a resilient cross ribbed neoprene pad with a high deflection rate. Alternately raised ribs provide effective isolation in both high and low load ranges.

FIGURE 20: Waffle Pad Isolator

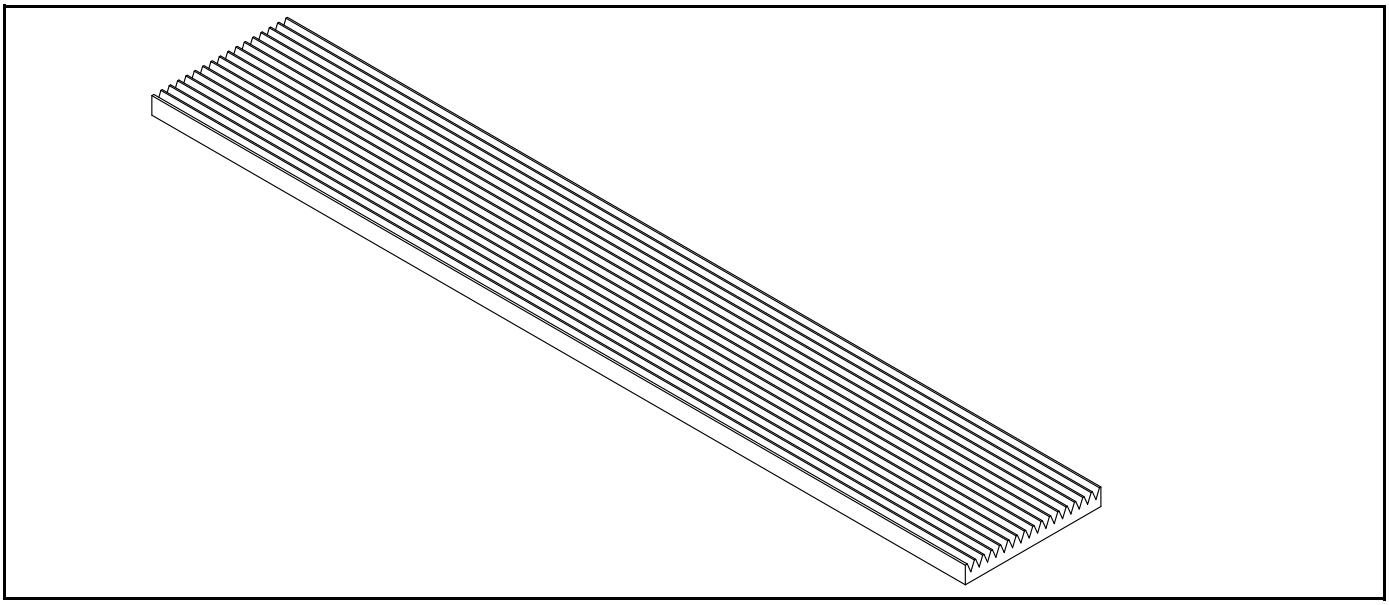

7.1.1 Installation Instructions for Waffle Pad Isolator

1. Lay strips on the top surface of the curb. *See Page 25, Figure 21*.
2. Hold them in place with tape, such as masking or duct tape.
3. Trim as needed to cover the perimeter of the curb.
4. Lift and place the air handler on top of curb.

FIGURE 21: Pad Isolator Installation Instructions

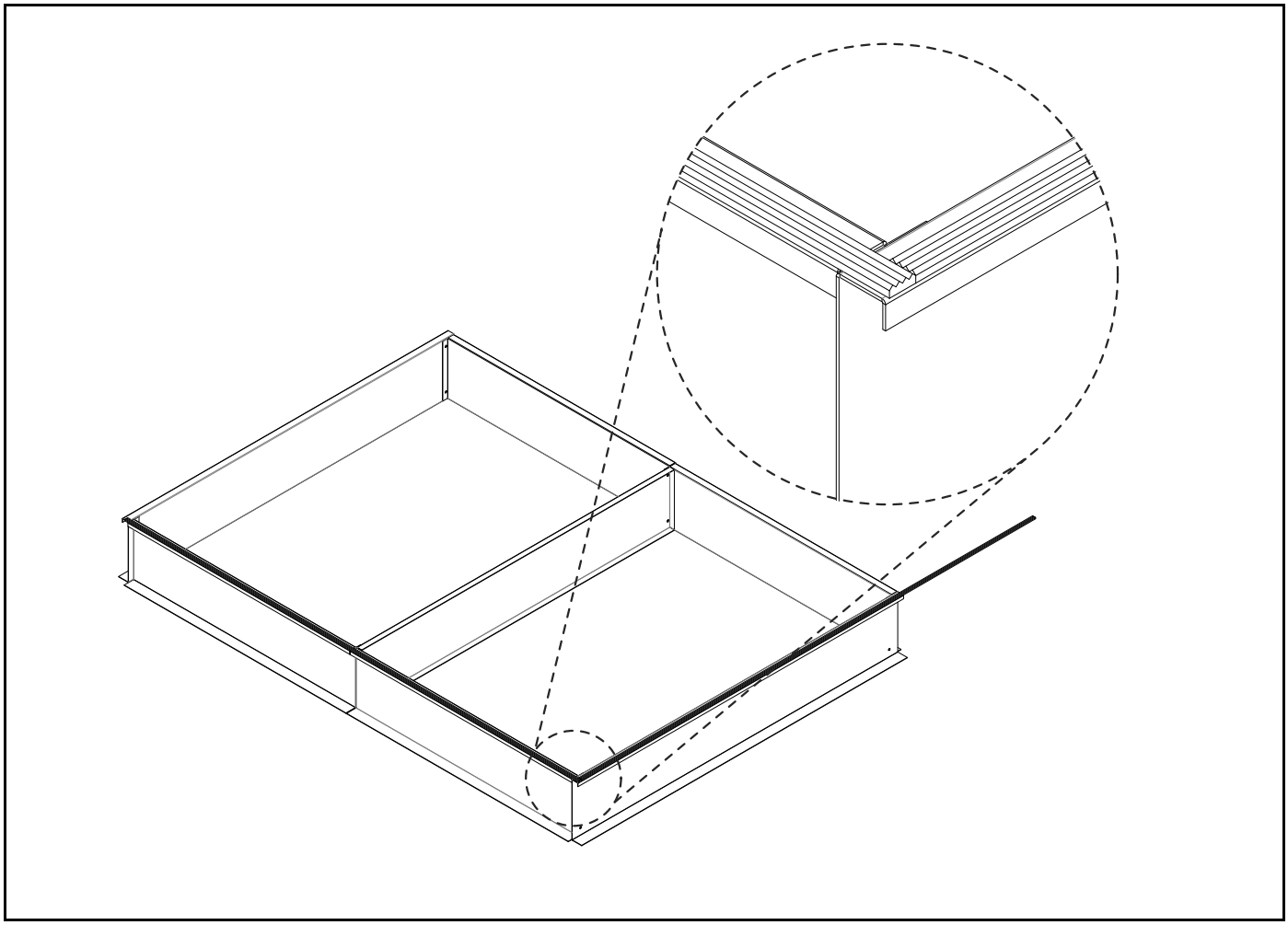

7.2 Neoprene or Spring Isolators for Hanger-Mounted Units

The hanger style isolator, which is available in either a neoprene version or spring version, is used to suspend the air handler from any overhead support. It is supplied with a rectangular steel housing which incorporates the neoprene element or spring. *See Page 25, Figure 22*.The design permits either the housing to be bolted directly to the ceiling or support structure or be suspended from hanger rods (which are sized and supplied by the installer along with all hardware). Neoprene style is normally selected when noise is also a consideration in addition to vibration. The spring style is normally selected when the concern is strictly vibration.

FIGURE 22: Hanging Isolators

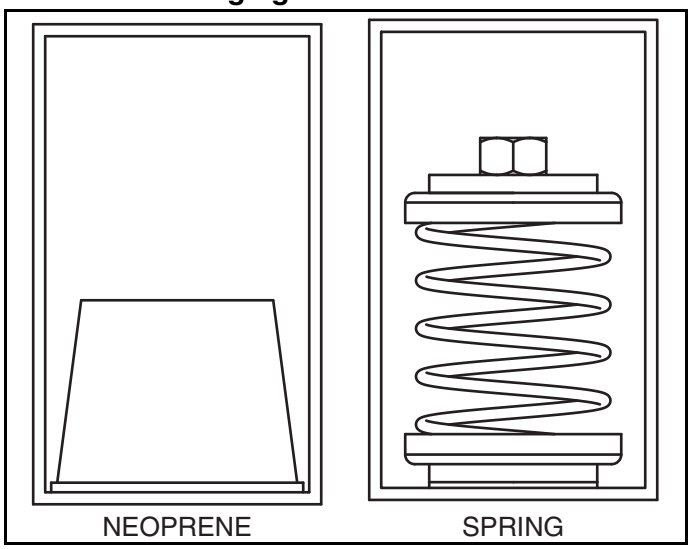

7.2.1 Installation Instructions for Neoprene or Spring Isolators for Hanger-Mounted Units

All hardware, which includes nuts, washers and hanger rods and support for the unit are to be

supplied by the installer.

1. Equipment should be hung at its proper elevation using temporary fixtures which can be removed after vibration isolators are installed and adjusted.
2. Isolators may be fastened directly to the structure or inserted in the hanger rods. (*See Page 26, Figure 23*) For best results, isolators should be located at or near the ceiling.
3. Install isolators.
4. Turn nut on lower rod assembly clockwise one complete turn on each isolator. Repeat this procedure until temporary hanging fixtures are loose and load of equipment is suspended completely on the vibration isolators. *See Page 26, Figure 23*.
5. Remove temporary hanger fixtures and level equipment by taking additional turns on the lower isolator rod nut clockwise to raise, counter clockwise to lower as required.

FIGURE 23: Hanger Isolators' Installation Instructions

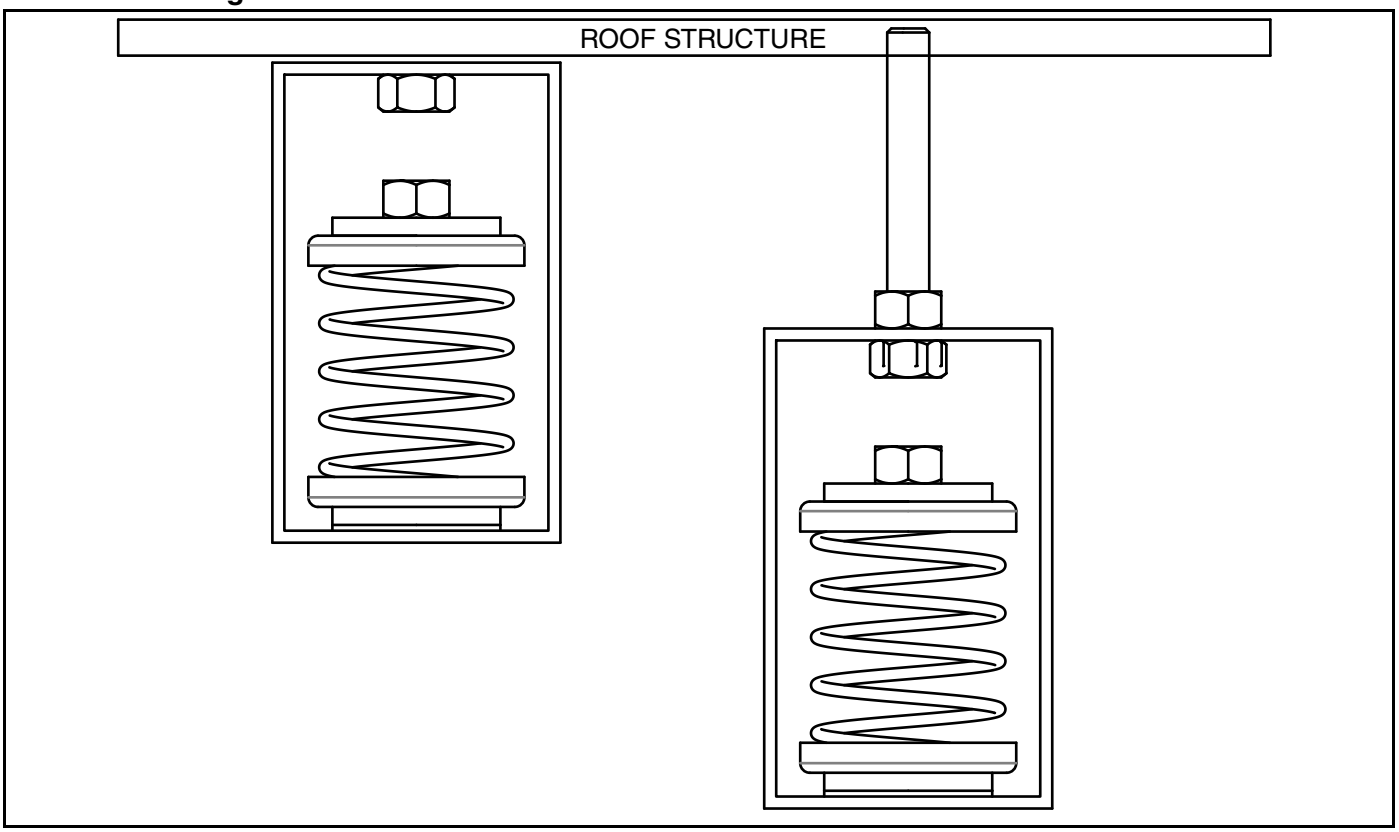

7.3 Neoprene or Spring Isolators for Pad-Mounted Units

The mount style is available in either a neoprene version or spring. It is used to support and isolate the air handler from a base pad or structural frame.

7.3.1 Neoprene Mount Isolator

The neoprene mount is a single piece unit and design to be bolted directly to the bottom support base of the air handling equipment and the pad or base it rests on (*See Page 27, Figure 24*). Neoprene style is normally selected when the equipment requires up to ½ inch (12.7 mm) of static deflection.

FIGURE 24: Pad Mounting of Neoprene Isolator

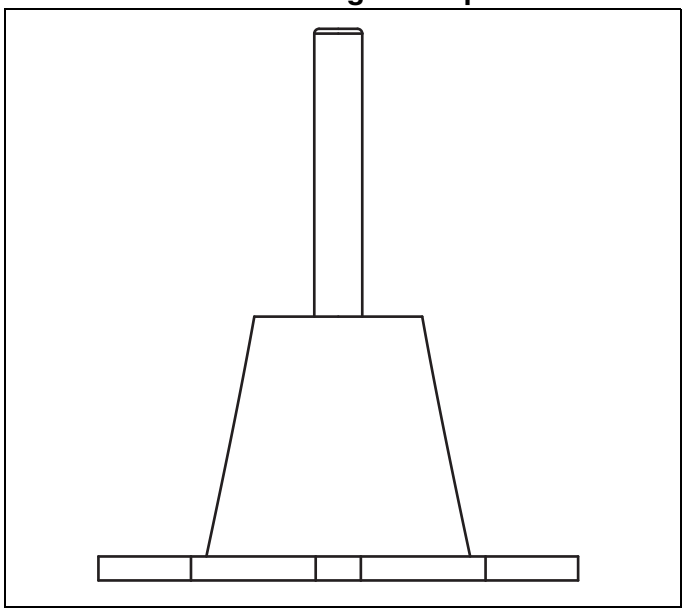

7.3.2 Installation Instructions for Neoprene Mount Isolator

All hardware is to be supplied by the installer.

1. Install blockers under the air handler equipment to allow the isolator to be slid in place.
2. Locate the isolator between the structure and support base of the air handler.
3. Bolt the base of the isolator securely to the structure.
4. Pass a bolt passing through the base of the air handler and screw it into the isolator. *See Page 27, Figure 24*.

7.4 Spring Mount Isolator

The spring mount is supplied with a rectangular steel housing which incorporates the spring and load tensioning adjustment bolt. It is equipped with neoprene stabilizers to provide lateral control without binding. Spring style is normally selected when the equipment requires up to 1" (25.4 mm) in deflection. *See Page 27, Figure 25*.

FIGURE 25: Pad Mounting of Spring Isolator

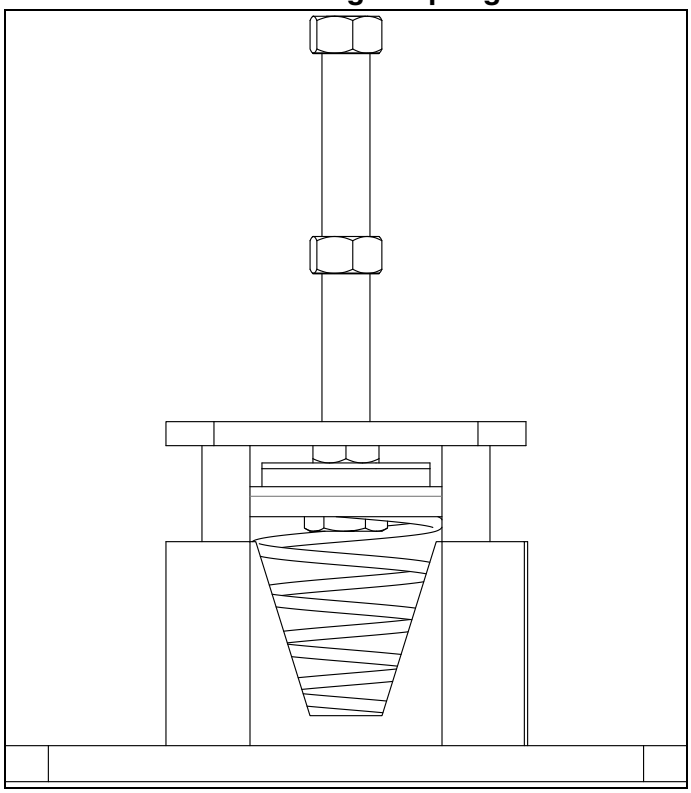

7.4.1 Installation Instructions for Spring Mount Isolator

All hardware required to mount the isolator to the structure is to be supplied by the installer.

1. The spring mount housing serves as the blocking during erection. Locate it between the structure and support base of the air handler.
2. Bolt the base of the isolator securely to the structure.
3. The equipment is held in place by the adjustment bolt passing through the base of the air handler.
4. Adjust the isolator so that the spring pressure plate is a minimum ¼" (6.35 mm) above the lower housing and no more than ½" (12.7 mm) above the lower housing.

SECTION 8: ROOF CURB

⚠ WARNING

			
Crush Hazard **Use proper lifting equipment and practices.**	**Falling Hazard** **Use proper safety equipment and practices to avoid falling.**	**Severe Injury Hazard** **Use proper lifting practices and equipment.** **Equipment and accessories are heavy.**	**Cut/Pinch Hazard** **Wear protective gear during installation, operation and service.** **Edges are sharp.**
Failure to follow these instructions can result in death, injury or property damage.			

Roof curbs that support the air handler and accessory sections are available for all horizontal air handlers that are to be installed on a typical flat roof (ie. bonded or corrugated). Roof curbs are shipped knocked down and require field assembly. Note: Before installation, verify that you have the correct roof curb and that all required components are present. If any are missing, contact your WEATHER-RITE™ independent representative.

8.1 Roof Curb Assembly and Installation

Assemble roof curb according to the assembly drawing on *Page 29*, *Figure 26*. Supplied hardware must be torqued to recommended specifications on *Page 6, Table 1*.

Place the curb on the roof in the position in which it will be installed. Check that the diagonal measurements are within 1/8"(3 mm) of each other. To ensure a weatherproof seal between the air handler and the curb, the curb must be level with no twist from end to end. Shim level as required and secure curb to roof deck using best building practices. The curb is self-flashing. Install roofing material as required.

NOTE: Check the installation location to ensure proper clearances to combustibles and clearance for access. *See Page 6, Section 3.1*.

FIGURE 26: Roof Curb

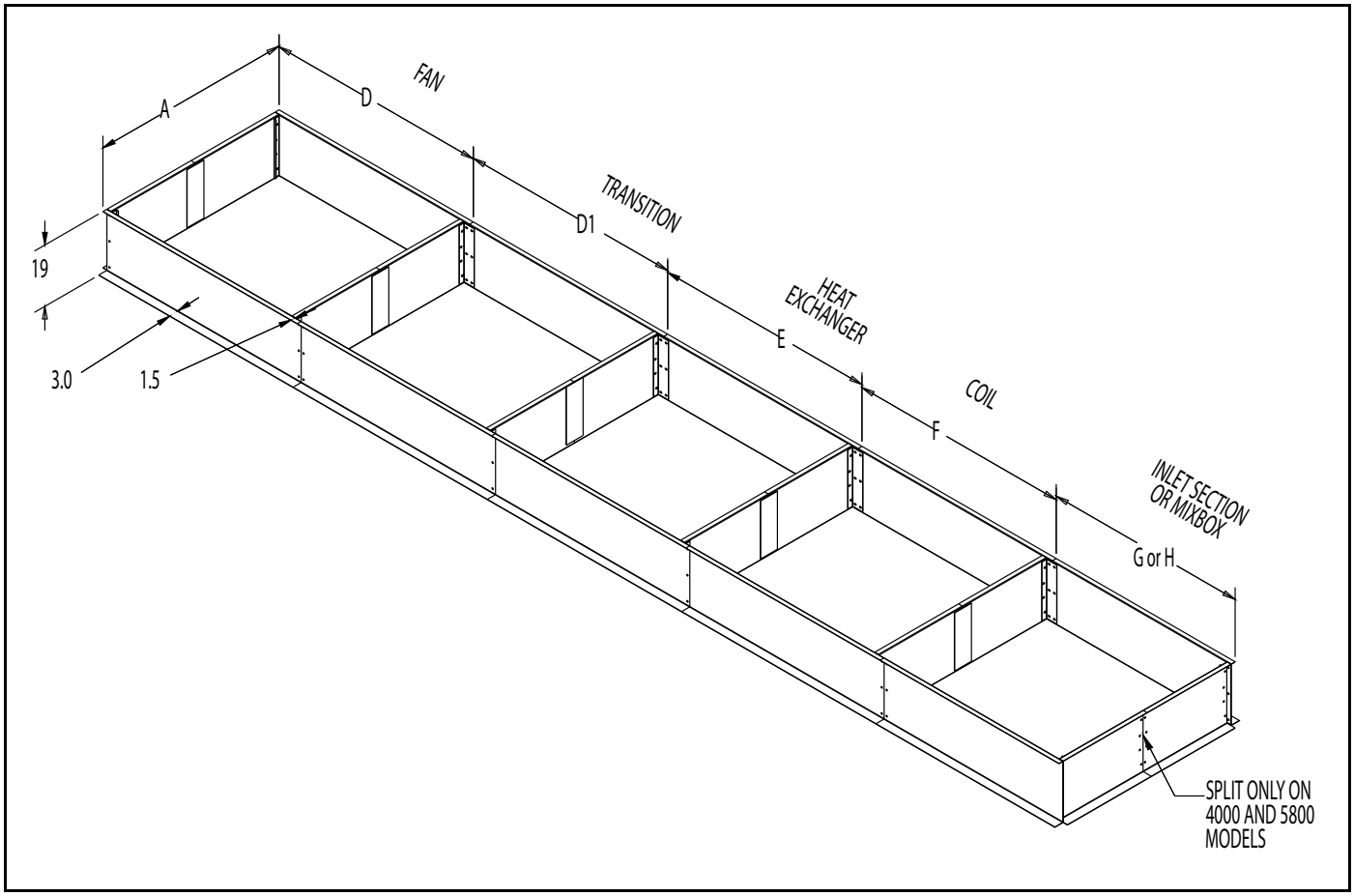

Table 7: Roof Curb Dimensions

	Dimensions							
	Width	Plenum	Forward Curve	Plenum Only	Heat Exchanger	Coil	Inlet Section	Mixbox
Model	A	D	D	D1	E	F	G	H
750	67.5	45.5	61.5	40.0	64.0	64.0	69.0	109.0
1250	73.5	50.5	67.5	40.0	76.0	76.0	69.0	113.0
1500	105.5	59.5	82.8	58.0	70.0	70.0	69.0	110.0
2000	115.5	59.5	82.8	63.0	86.0	86.0	69.0	117.0
2500	115.5	59.5	82.8	66.0	90.0	90.0	69.0	117.0
3000	115.5	59.5	82.8	60.0	122.0	122.0	69.0	117.0
4000	155.5	95.5	82.8	44.0	122.0	122.0	69.0	113.0
5800	155.5	95.5	82.8	44.0	86.0	86.0	69.0	113.0

**To calculate the total length of the roof curb, add together lengths of applicable sections.*

Table 8: Roof Curb Weights

	Weights						
	Plenum Fan Section	Forward Curve Fan Section	Plenum Fan Transition	Heat Exchanger Section	Coil Section	Inlet Section	Mixbox Section
Model	lbs	lbs	lbs	lbs	lbs	lbs	lbs
750	64.0	76.1	59.8	78.1	78.1	81.9	112.3
1250	70.5	83.4	62.5	89.9	89.9	84.6	118.0
1500	92.0	109.2	90.8	99.9	99.9	99.2	130.3
2000	96.5	114.2	99.2	116.7	116.7	103.7	140.2
2500	96.5	114.2	101.5	119.7	119.7	103.7	140.2
3000	96.5	114.2	96.9	144.0	144.0	103.7	140.2
4000	142.1	132.4	103.0	162.3	162.3	122.0	155.4
5800	142.1	132.4	103.0	134.9	134.9	122.0	155.4

NOTE: **To calculate the total weight of the roof curb, add together weights of applicable sections.*

8.2 Air Handler Mounting to Roof Curb

After the curb has been installed, the air handler may be placed on the curb. There must be a 1/8" (.3 cm) x 2" (5.1 cm) neoprene closed cell, adhesive-back gasket (supplied by others) between the top of the curb and the base surface of the air handler to prevent moisture from leaking into the building (ie. from driving rains or melting snow.)

The installer is responsible for tying the air handler to the curb per all applicable codes. *See Page 30, Figure 27* for details.

FIGURE 27: Curb Mounting

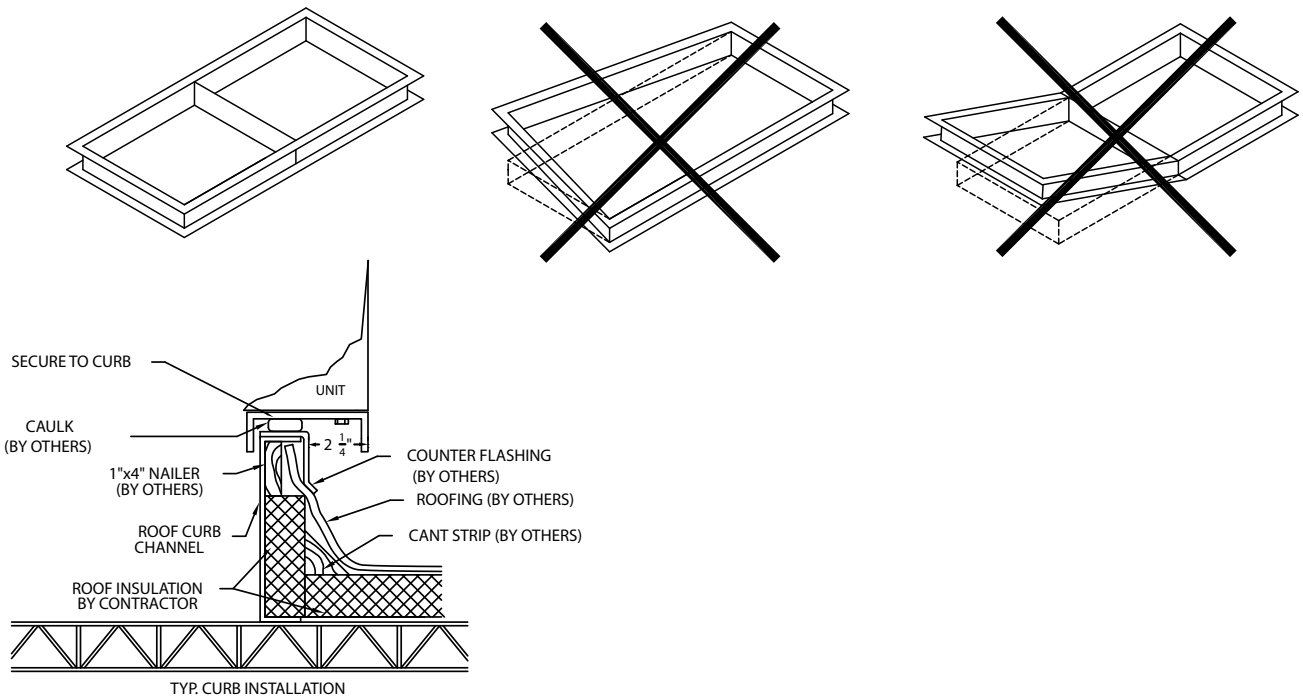

SECTION 9: INLET HOODS

⚠ WARNING

			
Crush Hazard	**Falling Hazard**	**Severe Injury Hazard**	**Cut/Pinch Hazard**
Use proper lifting equipment and practices.	**Use proper safety equipment and practices to avoid falling.**	**Use proper lifting practices and equipment.** **Equipment and accessories are heavy.**	**Wear protective gear during installation, operation and service.** **Edges are sharp.**
Failure to follow these instructions can result in death, injury or property damage.			

Inlet hoods are shipped unassembled and must be assembled prior to use of unit.

NOTE: Check to be sure that all required components are present. If any are missing, contact Weather-Rite or your WEATHER-RITE™ independent distributor.

FIGURE 28: Inlet Hood without Filters (IDFD 750 - 1500)

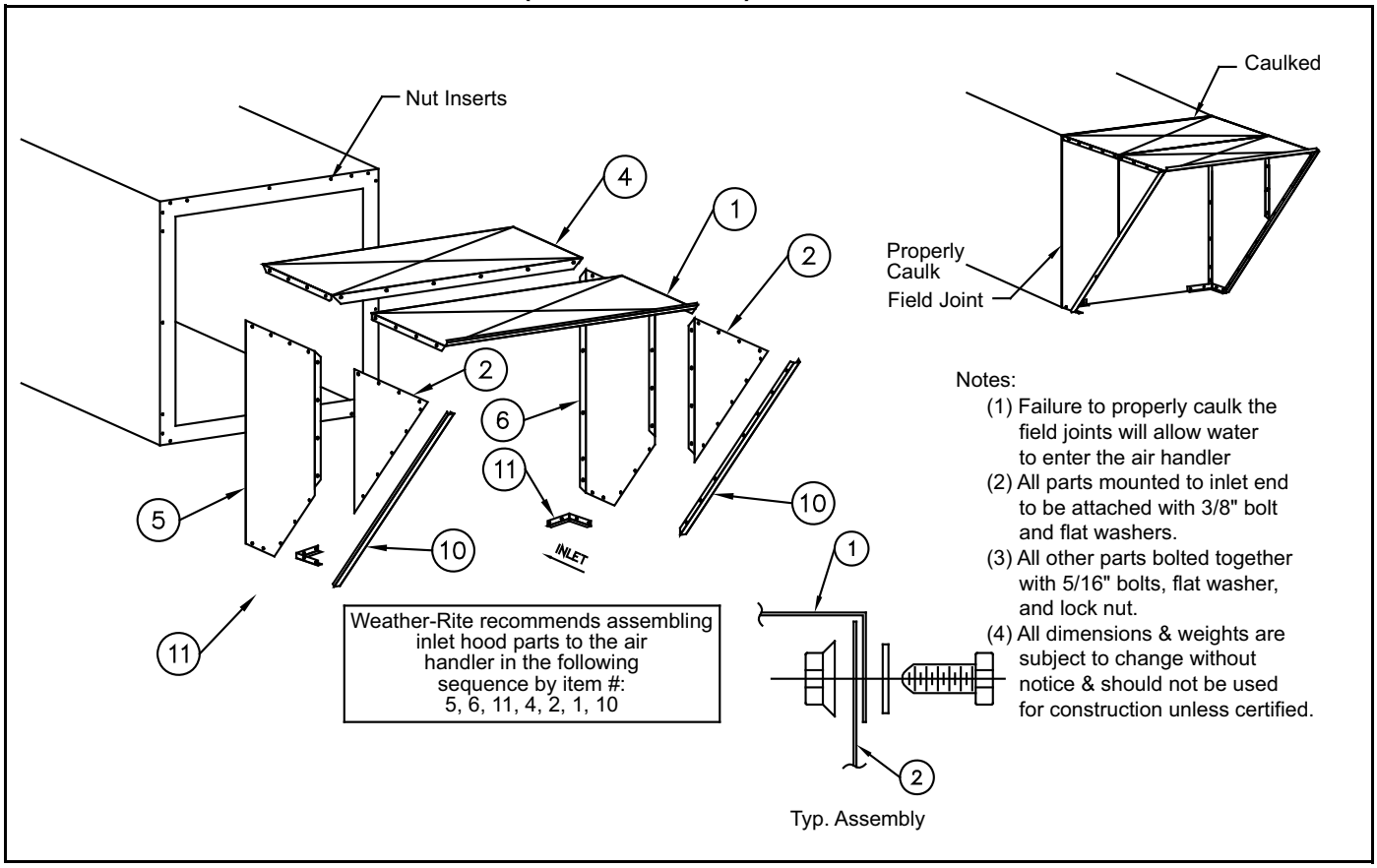

FIGURE 29: Inlet Hood without Filters (2000 - 5800)

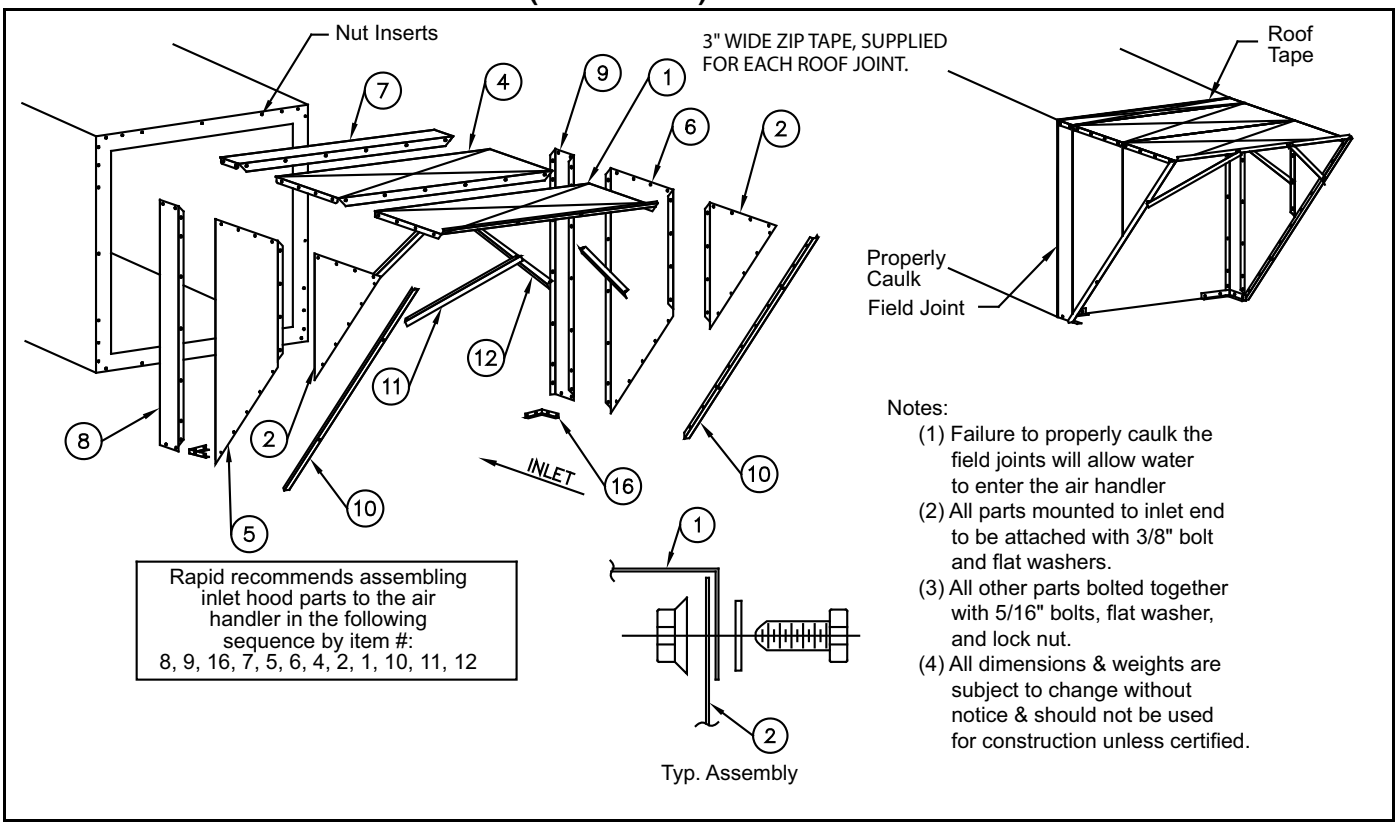

FIGURE 30: Inlet Hood with Permanent Filters

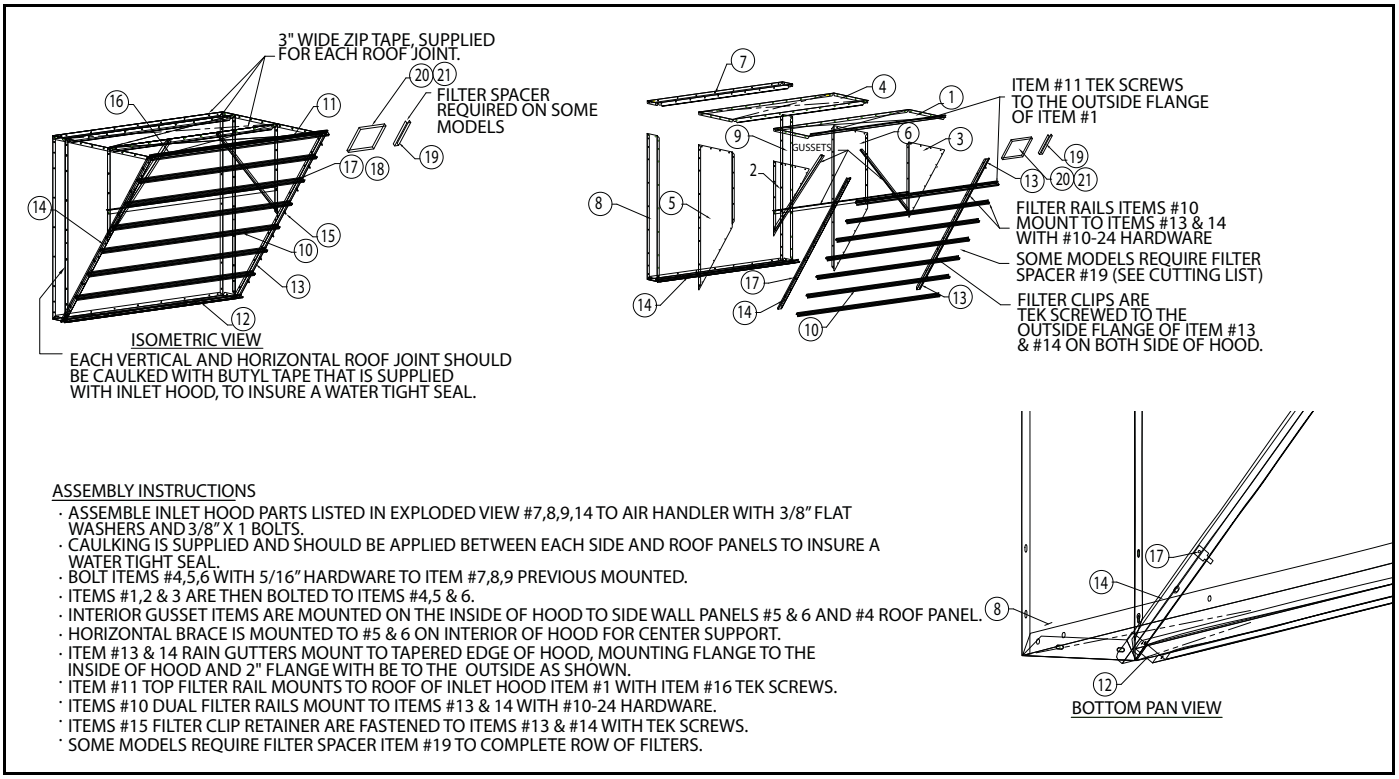

FIGURE 31: Inlet Hood with Moisture Limiter

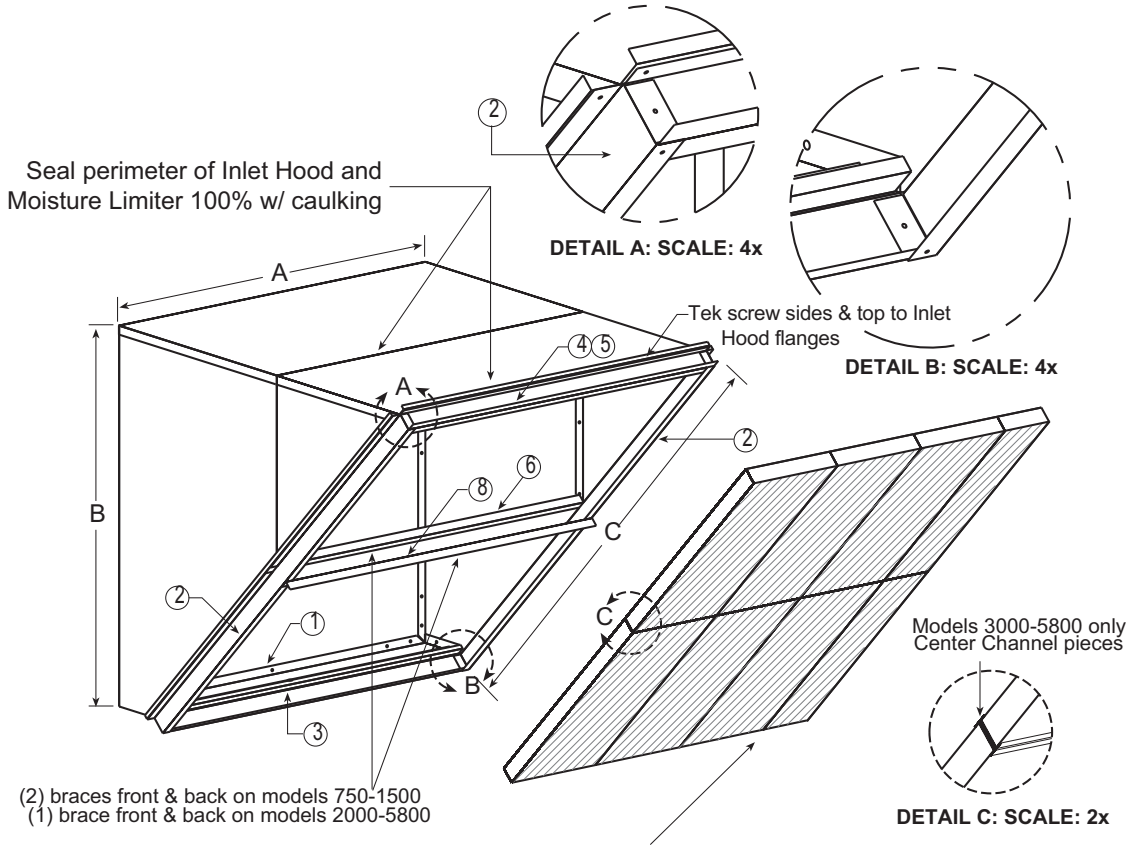

On models 3000-5800, moisture limited media is stacked two rows high and separated with sheetmetal channels pop riveted together. On all other models, moisture limited media is installed with full-lenth rows.

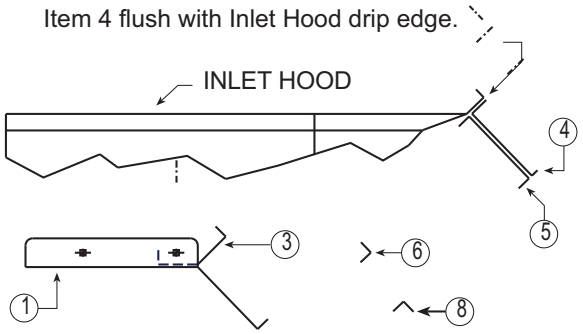

Assembly Instructions:

1. Pop rivet items #1 and #3 together and items #4 and #5 together and center channel piece (see detail C) for model 3000-5800 only.
2. If inlet hood is currently mounted, remove corner brackets. Bolt floor (items #1 and #3) to bottom of the inlet frame and sides of hood.
3. Tek screw one side to inlet hood rain gutter and to floor.
4. Pop rivet back supports (item #6) to inlet hood rain gutter using notches in side as a guide.
5. Tek screw top (items #4 and #5) to top lip of hood and to sides.
6. Install Moisture Limiters media.
7. Tek screw the other side to inlet hood rain gutter and to floor.
8. Tek screw #8 moisture limiter media to front of inlet hood.
9. Seal all joints of inlet hood and perimeter of mist eliminator to inlet hood 100% with caulking.

NOTE: 1. Inlet hood framing side (item #2) not shown.
2. All dimensions are in inches.
3. Consult pages 28 & 29, Figures 20 & 21 for details on basic inlet hood assembly instructions.

SECTION 10: SERVICE PLATFORM

⚠ WARNING

			
Crush Hazard **Use proper lifting equipment and practices.**	**Falling Hazard** **Use proper safety equipment and practices to avoid falling.**	**Severe Injury Hazard** **Use proper lifting practices and equipment.** **Equipment and accessories are heavy.**	**Cut/Pinch Hazard** **Wear protective gear during installation, operation and service.** **Edges are sharp.**
Failure to follow these instructions can result in death, injury or property damage.			

Service Platforms are available for use with horizontal or vertical units. See *Page 35* for layout and assembly instructions.

FIGURE 32: Service Platform for an Vertical Air Handler

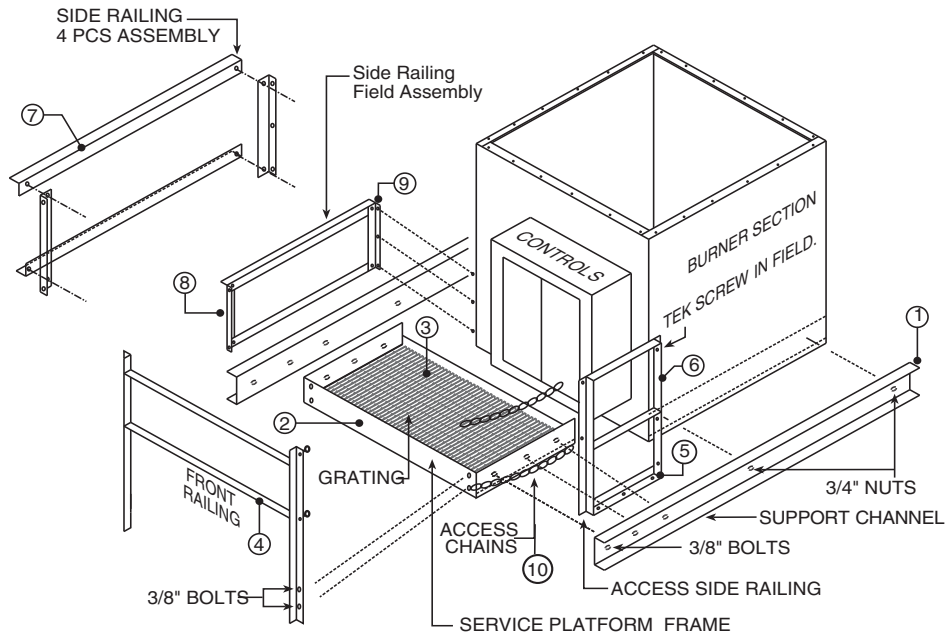

Assemble in the following order:

1. Bolt support channels to air handler with four ¾" nuts.
2. Bolt service platform frame between support channels with eight 3/8" x 1" bolts and fig nuts.
3. Lay grating inside service platform frame.
4. Bolt from railing to service platform with four 3/8" x 1" bolts and fig nuts.
5. Screw access railing to support channels with three #14 self-tapping screws.
6. Tek screw access railing to air handler roof.
7. Pre-assemble side railing (4 pieces) with four 3/8" x 1" bolts and fig nuts.
8. Bolt side railing to front railing with two 3/8" x 1" bolts and fig nuts.
9. Screw side railing to angle iron frame with three #14 self-tapping screws.
10. Attach safety chains between access side railing and front railing.

FIGURE 33: Service Platform for a Horizontal Air Handler

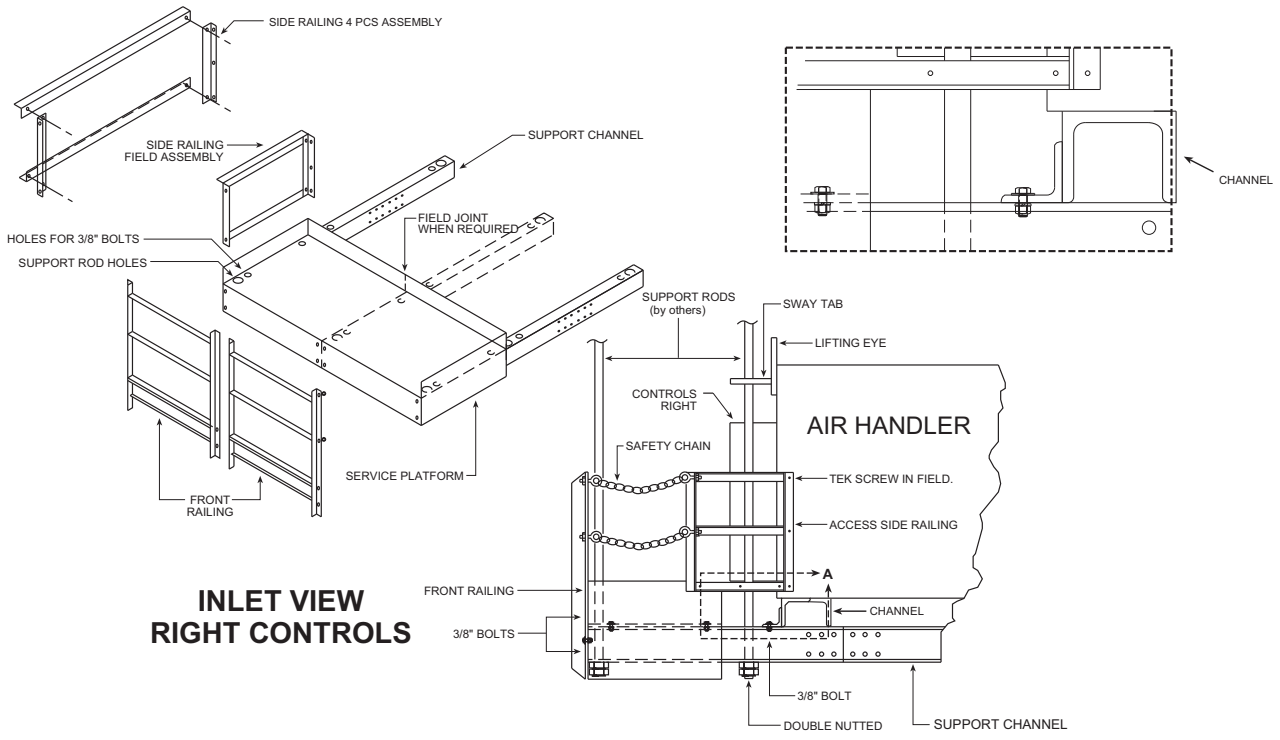

SECTION 11: DAMPERS

⚠ WARNING

			
Crush Hazard **Use proper lifting equipment and practices.**	**Falling Hazard** **Use proper safety equipment and practices to avoid falling.**	**Severe Injury Hazard** **Use proper lifting practices and equipment.** **Equipment and accessories are heavy.**	**Cut/Pinch Hazard** **Wear protective gear during installation, operation and service.** **Edges are sharp.**
Failure to follow these instructions can result in death, injury or property damage.			

11.1 Discharge Damper Installation

As a standard, discharge dampers ship loose with the air handler. Dampers are suitable for indoor mounting only. If the installed outdoors, the installer must provide suitable weather protection for the damper and actuator(s). Discharge dampers should be mounted 3 duct diameters downstream of Forward Curve fan discharge opening.

To install the discharge damper on an interior wall, drill holes every 8" (20.5 cm) in the flanges on all four sides of the discharge dampers to accommodate lag bolts (supplied by others).

SECTION 12: DISCHARGE HEADS

⚠ WARNING

			
Crush Hazard **Use proper lifting equipment and practices.**	**Falling Hazard** **Use proper safety equipment and practices to avoid falling.**	**Severe Injury Hazard** **Use proper lifting practices and equipment.** **Equipment and accessories are heavy.**	**Cut/Pinch Hazard** **Wear protective gear during installation, operation and service.** **Edges are sharp.**
Failure to follow these instructions can result in death, injury or property damage.			

12.1 Discharge Heads' Installation

All discharge heads are shipped assembled. The discharge head is designed for mounting to the cabinet of the air handler (covering the discharge opening) or to an interior wall. The discharge head has four outward-turned flanges. To install discharge head to the cabinet of the air handler, drive sheet metal screws or pop rivets (supplied by others) through the flanges into the air handler cabinet every 8" (20.5 cm) on all four sides of the discharge head. The discharge head must be field-supported.

To install the discharge head on an interior wall, drill holes every 8" (20.3 cm) in the flanges on all four sides of the discharge heads to accommodate lag bolts (supplied by others). The discharge head must be field supported.

For four, three and one way discharge heads, *see Page 38, Figure 34* and *Page 39*, *Figure 35* for layout and dimensions.

FIGURE 34: Discharge Heads

ONE WAY

Dimensions (Forward Curve)					Weight
Fan Size	A	B	C		
920-18	24.8	24.8	33.5	31.0	122
922	27.3	27.3	40.0	44.1	157
925	31.3	31.3	41.5	47.1	199
930	36.8	36.8	48.9	61.8	257
936	42.9	42.9	52.6	69.3	311

Dimensions (Plenum)				Weight
Fan Size	A	B	C	
750	20	24	12.0	56
1250	30	48	12.0	89
1500	48	60	12.0	164
2000	48	60	12.0	164
2500	48	60	12.0	164
3000	48	60	12.0	164
4000	84	63	12.0	260
5000	84	63	12.0	260

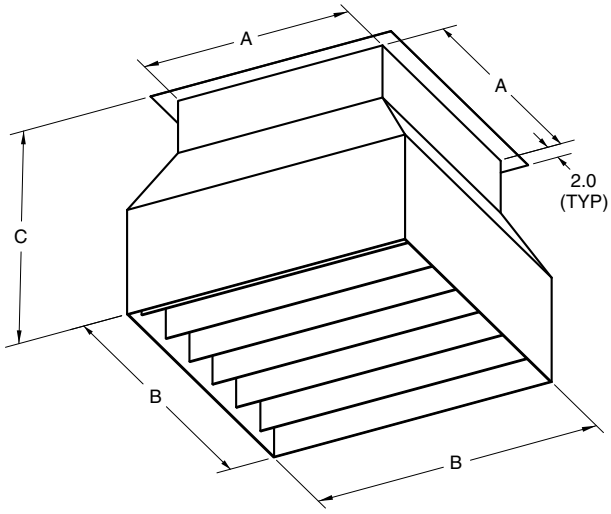

THREE WAY

Dimensions (Forward Curve)					Weight
Fan Size	A	B	C	D	lbs
920-18	24.8	41.5	22.5	22.8	80
922	27.3	64.8	39.8	27.3	110
925	31.3	62.3	37.3	31.3	120
930	36.8	92.0	56.5	36.3	210
936	42.9	98.0	57.8	42.7	240

Dimensions (Plenum)					Weight
Fan Size	A	B	C	D	
750	20	27.3	13.8	24	110
1250	30	37.5	16.8	48	130
1500	48	55.8	22.1	60	210
2000	48	55.8	22.1	60	210
2500	48	55.8	22.1	60	210
3000	48	55.8	22.1	60	210
4000	84	99.0	49.0	63	250
5000	84	99.0	49.0	63	250

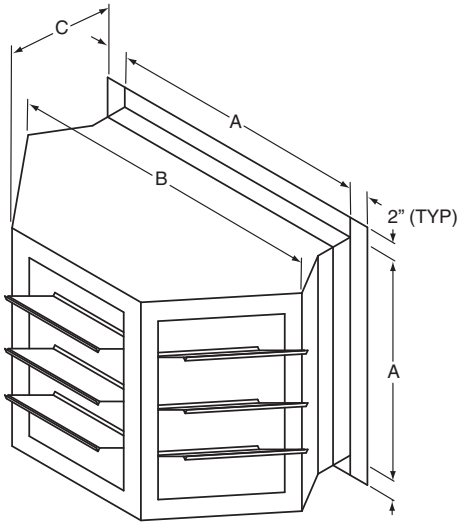

FOUR WAY

Dimensions (Forward Curve)				Weight
Fan Size	A	B	C	
920-18	24.8	24.8	30.8	119
922	27.3	27.3	33.3	132
925	31.3	31.3	37.3	151
930	36.8	36.8	42.8	176
936	42.9	42.9	48.9	208

Dimensions (Plenum)				Weight
Fan Size	A	B	C	
750	20	24	7.5	110
1250	30	48	15.0	130
1500	48	60	18.8	210
2000	48	60	18.8	210
2500	48	60	18.8	210
3000	48	60	18.8	210
4000	84	63	21.4	250
5000	84	63	21.4	250

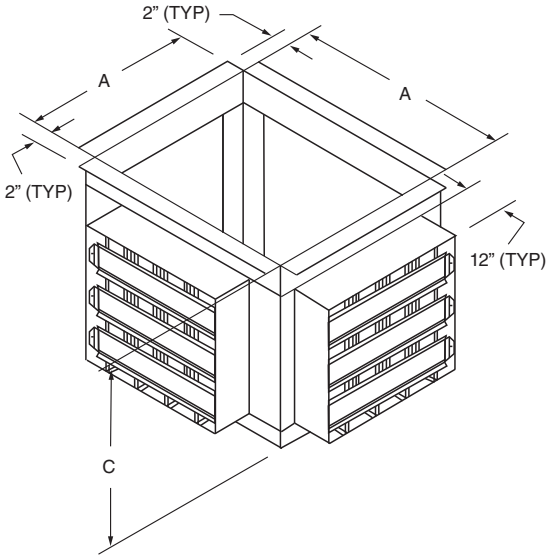

FIGURE 35: Discharge Plate

Dimensions				
Fan Size	**A (I.D.)**	**B**	**C (min)**	**C (max)**
920-18	37.0	35.1	18.0	27.0
922	39.8	39.6	18.0	27.0
925	43.3	43.6	25.0	38.0
930	48.7	48.7	30.0	45.0
936	55.0	55.0	36.0	54.0

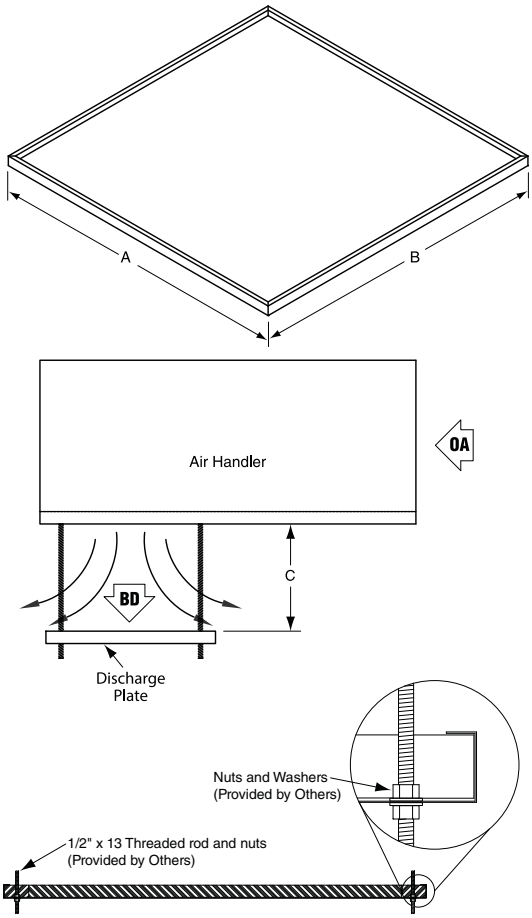

SECTION 13: DUCT CONSIDERATIONS

The air handler has been designed to operate at the specific air volume and external static pressure that was ordered. This static pressure is generated by any additional components that are added to the heater (i.e. inlet hood, filter section, mix box, dampers, ductwork, discharge heads, etc). Additional static pressure beyond that ordered will affect the performance of the air handler and lessen the air volume that can be delivered.

Proper engineering methods need to be employed when calculating duct and component static pressure (i.e. 2009 ASHRAE Handbook - Fundamentals, Chapter 21).

The system ductwork must comply with Sheet Metal and Air Conditioning Contractors Nationals Association (SMACNA) or any other recognized standards.

It is recommended that flexible duct connections (with proper operating temperature rating) be incorporated into the duct work design to prevent the transmission of any vibrations, either mechanical or harmonic.

As a general rule, all ducts should have a straight run of at least 3 hydraulic duct diameters immediately before and after the air handler before adding any fittings, elbows, restrictions, etc.

Hydraulic duct diameter for round ducts (in inches):

Dh = d

Dh: hydraulic diameter

d: round duct inside diameter

Hydraulic duct diameter for rectangular ducts (in inches):

Dh = (2*H*W)/(H+W)

Dh: hydraulic diameter

H: rectangular duct inside height

W: rectangular duct inside width

The air handler is not designed to support the weight of ductwork. Ductwork must be constructed in a fashion that is self-supporting.

Depending on the options ordered with the air handler, flanges (either external or internal) may be provided to facilitate connection of ductwork. In cases where flanges are not provided, flat surfaces on the exterior skin of the air handler are provided to facilitate connection of ductwork.

Neither the flanges nor exterior skin of the air handler are capable of supporting the load of the ductwork. Ductwork support must come from the structure itself that the air handler is servicing. On horizontal runs, it is recommended that ductwork be supported every 6' (1.8 m) for ductwork that has a cross section of 10 ft^2 (0.9 m^2) or less and every 4' (1.2 m) for ductwork which has a cross section of greater than 10 ft^2 (0.9 m^2). On vertical runs, it is recommended that ductwork be supported every 10' (3.0 m). On both cases, supporting members should be sized to carry the weight load.

13.1 Inlet Duct Work

Inlet duct work height and width must be no smaller than the air handler inlet height and width and supply only uncontaminated air to the air handler.

13.2 Return Air Duct

Return air duct work height and width must be no smaller than the air handler return air opening height and width.

13.3 Discharge Duct Work

Flexible connections on discharge ductwork must have a minimum temperature rating of 500 °F (260 °C). Discharge duct work height and width must be no smaller then the air handler return air opening height and width.

SECTION 14: VENTING

⚠WARNING

Carbon Monoxide Hazard

Air handler must be vented.

Air handler must be installed according to the installation manual.

Failure to follow these instructions can result in death or injury.

14.1 General Venting Requirements

This air handler must be vented in accordance with the rules contained in this manual and with the following national codes and any state, provincial or local codes which may apply:

United States: Refer to NFPA 54/ANSI Z223.1-latest revision, National Fuel Gas Code for natural gas and LPG units.

Canada: Refer to CSA B149.1 - latest revision, Natural Gas and Propane Installation Code for natural gas and LPG units.

14.2 Recommended Flue Venting Practices

Outdoor indirect air handlers are shipped with vent pipe connections. Indoor indirect air handlers vent connections can be provided or provided by others.

All indirect fired air handlers must be vented. Each air handler must have an individual vent pipe and vent terminal.

Termination of the vent pipe must be located so that the combustion fumes can not be drawn back into the air handler or into any other outside air intakes.

Vent pipe diameter must match the diameter of the air handler's flue pipe extension. The installer must provide a rain cap or weather cap. All joints must be sealed. Type "B" vents are not acceptable. Venting must be of category III or higher.

Do not support the weight of the vent pipe on the equipment's flue pipe extension. Vent pipe must be self supporting.

On equipment with a high turndown burner, it is recommended to insulate single wall vent pipes. Insulation must have a minimum temperature rating of 1000 °F (537.8 °C).

Indoor horizontal venting requires a minimum effective vent length 5ft and maximum effective vent length 25ft. Provide a minimum of 12 inches of straight vent pipe after the discharge before fittings.

Indoor vertical venting requires a minimum of 10 ft and maximum effective vent length of 50ft.

The vent pipe should be fitted with a drip leg with a clean out and a drain plug in the bottom. The vent pipe shall be constructed so that any water or condensate that collects in the vent will remain in the drip leg and not drain back into the air handler. Be sure the drip leg is constructed in a way that water or condensate will not fall on air handler's controls when drain plug is removed. Pitch horizontal vents downward 1/4" (.6 cm) per foot toward outlet for condensate drainage. Support horizontal runs as required to prevent sagging.

Do not install dampers or other restrictive devices in the vent pipe.

The vent pipe should not be installed in such a manner that access to the components is obstructed.

Maximum clearances to combustibles around the vent pipe are significantly higher than for the air handler.

The vent pipe shall have a minimum of at least 36" (91.4 cm) clearances to combustibles, and be guarded to protect personnel from coming in contact.

Approved listed thimble is to be used wherever the vent pipe passes through a combustible wall or ceiling/roof.

14.3 Heat Exchanger Condensate Drain Connection

Indirect fired air handlers are provided with condensate drains with integrated P traps. Connections in main electrical enclosure will need to connected with stainless steel pipe (pipe by others) exiting main electrical enclosure and drained as per applicable local codes. In extreme cold environments pipe should be insulated or wrapped with heat tape to prevent freezing. Refer to the air handler drawings for the exact location. This connection must be extended away from the air handler for proper drainage.

Drainage of condensate directly onto the roof may be acceptable; refer to local codes. It is recommended that a small drip pad of either stone, mortar, wood or metal be provided to protect the roof against possible damage.

If condensate is to be piped into the building drainage system, the drain line should be pitched away from the unit at a minimum of 1/8" (.32 cm) per foot. The drain line must penetrate the roof external to the air handler. Refer to local codes for additional requirements. Sealed drain lines require venting to assure proper condensate flow.

SECTION 15: BURNERS

⚠WARNING

Explosion Hazard

Leak test all components of gas piping before operation.

Gas can leak if piping is not installed properly.

Do not high pressure test gas piping with air handler connected.

Failure to follow these instructions can result in death, injury or property damage.

15.1 Principle of Operation

The burner is a self-contained unit comprised of a blower assembly, firing head, igniter and flame monitoring system. Gas burners use multiple orifices with venturi operation for proper combustion.

The "Type X" burner is used on gas fired air handlers with an input of 35 - 750 MBTU(10.3-220 kW) *See Page 43, Figure 37*

The "Type J" burner is used on gas-fired air handlers with an input of 300 - 2,200 MBH (87.9 - 644.8 kW). *See Page 43, Figure 36*. The "Type C" burner is used on gas-fired air handlers with an input of 2,201 - 5,625 MBH (644.9 - 1648.5 kW). *See Page 44, Figure 38*

For more information on the burner provided in a specific air handler, refer to the burner manufacturer's documentation.

Air for combustion is furnished by an integrally mounted, motor-driven combustion air fan and is controlled by a multi-louvered damper assembly. The combustion air then discharges into the burner blast tube assembly. High turbulence flow is controlled by means of an adjustable fan diffuser system.

The different modes of operation are achieved by using appropriate control valves and fuel/air actuators. Burners are available with on/off, high/low/off and full modulating modes. The air/fuel ratio is established at the time of start-up and proven with combustion test equipment to provide the lowest practical emissions with a clean flame. *See Page 68, Section 20.8 through Page 69, Section* for proper procedures and emission levels.

FIGURE 36: Typical "Type J" Burner

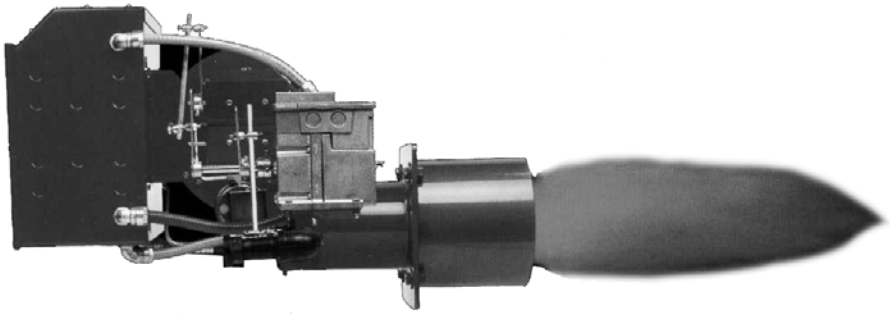

FIGURE 37: Typical "Type X" Burner

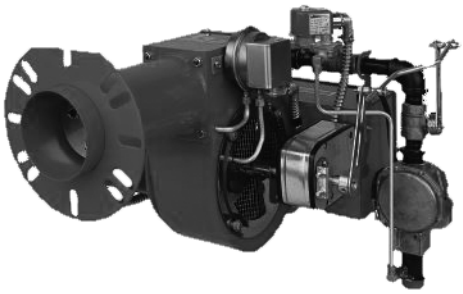

FIGURE 38: Typical "Type C" Burner

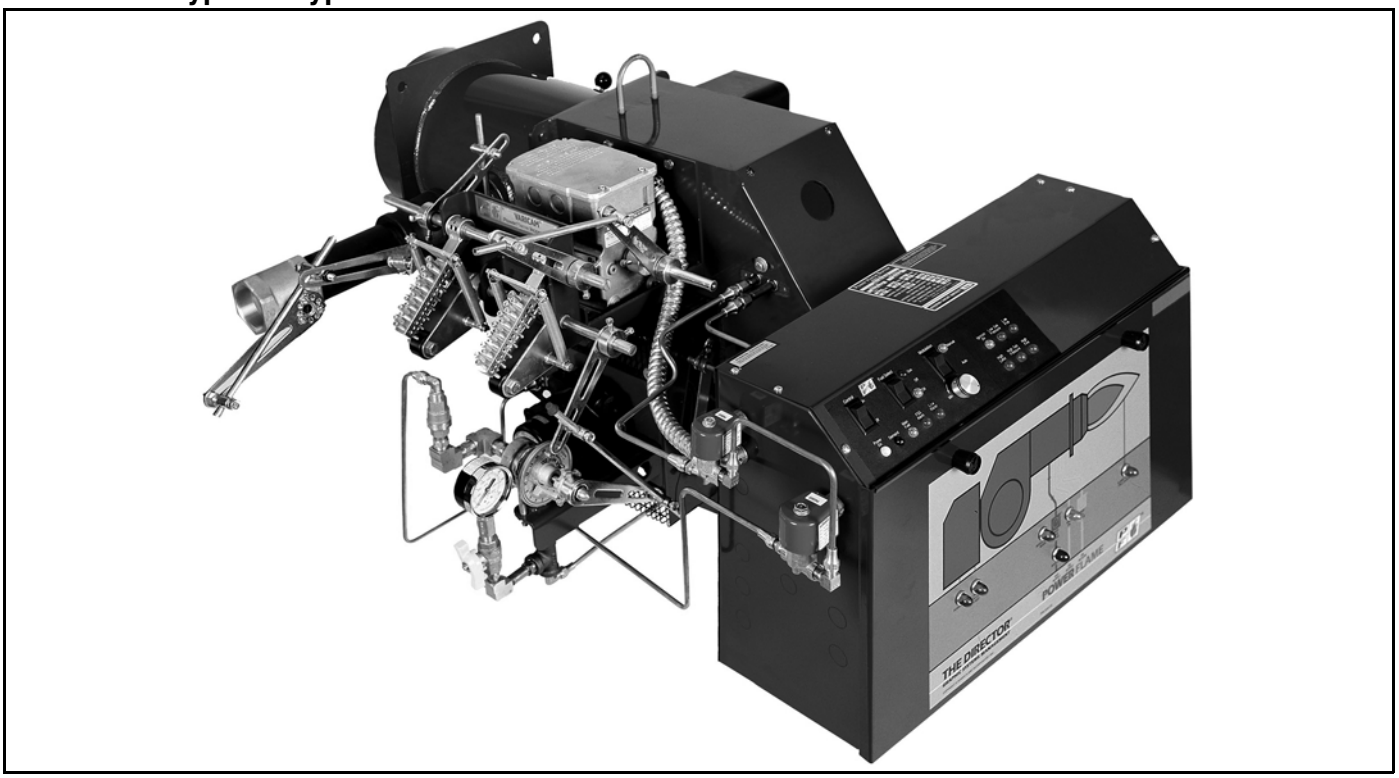

15.2 Burner Pilot Assemblies

"Type J" burners on the air handlers can utilize either a flame rod (natural gas only) or a ultraviolet scanner. On/Off, High/Low/Off and 3:1 modulating natural gas "J" burners use a flame rod as standard. 8:1 and 10:1 modulating natural gas "J" burners and all LPG "J" burners use a ultraviolet scanner as standard.

All "Type C" burners use an ultraviolet scanner. All burners are preset at the factory for proper operation and firing rate. If field re-adjustment of ignition electrodes or flame rod is required refer to *Page 44, Figure 39 through Page 46, Figure 42* for the proper pilot assembly set-up.

FIGURE 39: "Type J" Burner with Flame Rod - Natural Gas Only (Not for use with LPG)

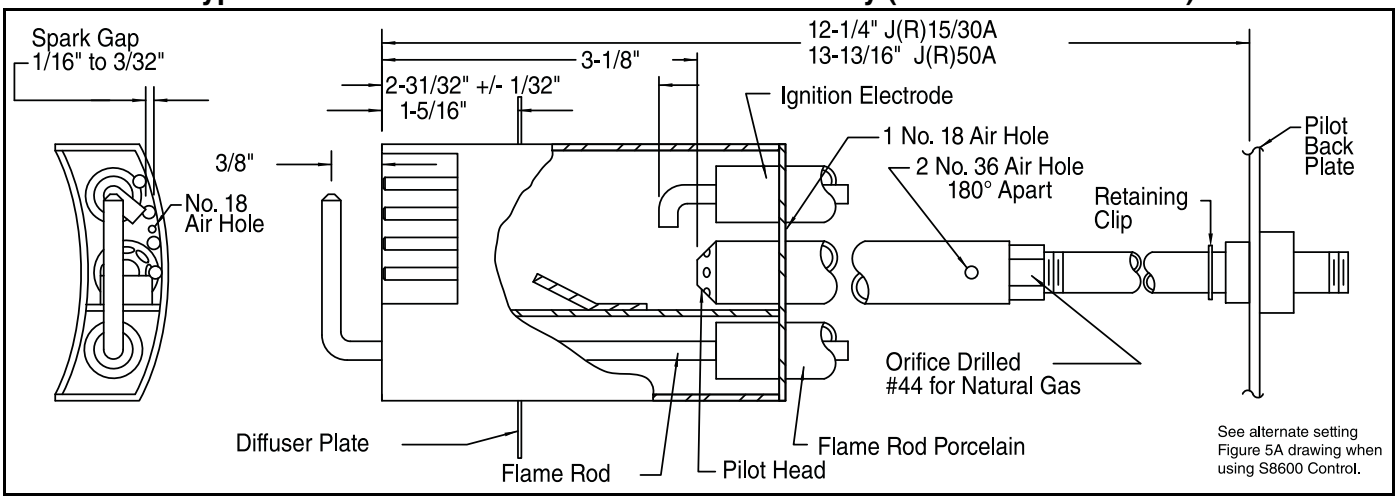

FIGURE 40: "Type J" Burner with Ultraviolet Scanner - Natural Gas or LPG

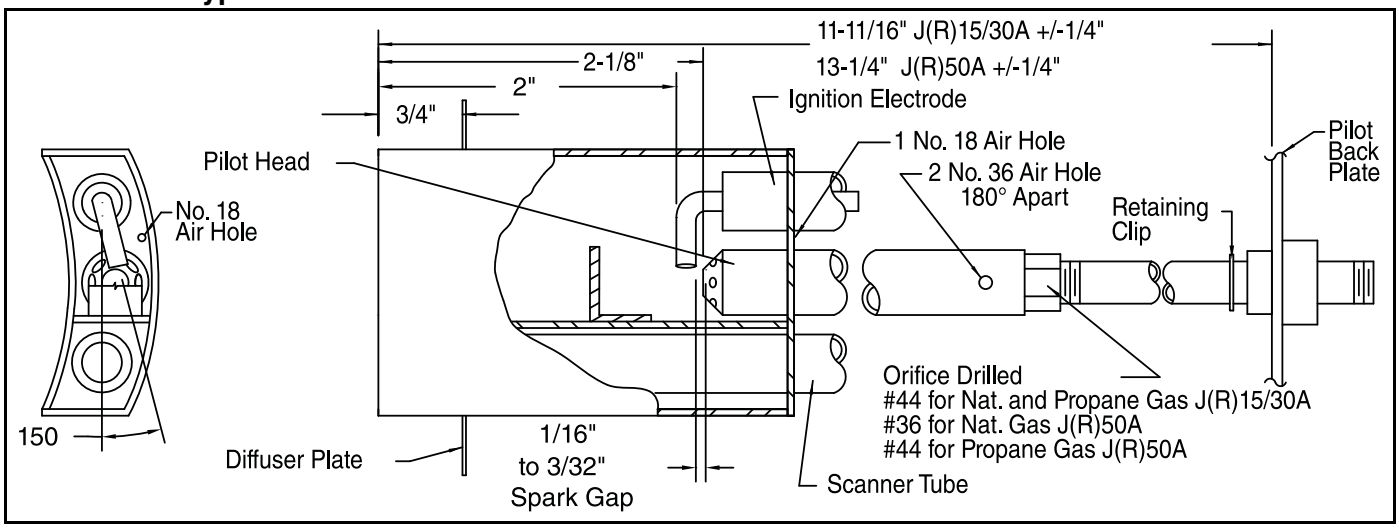

FIGURE 41: "Type X" Burner with Flame Rod

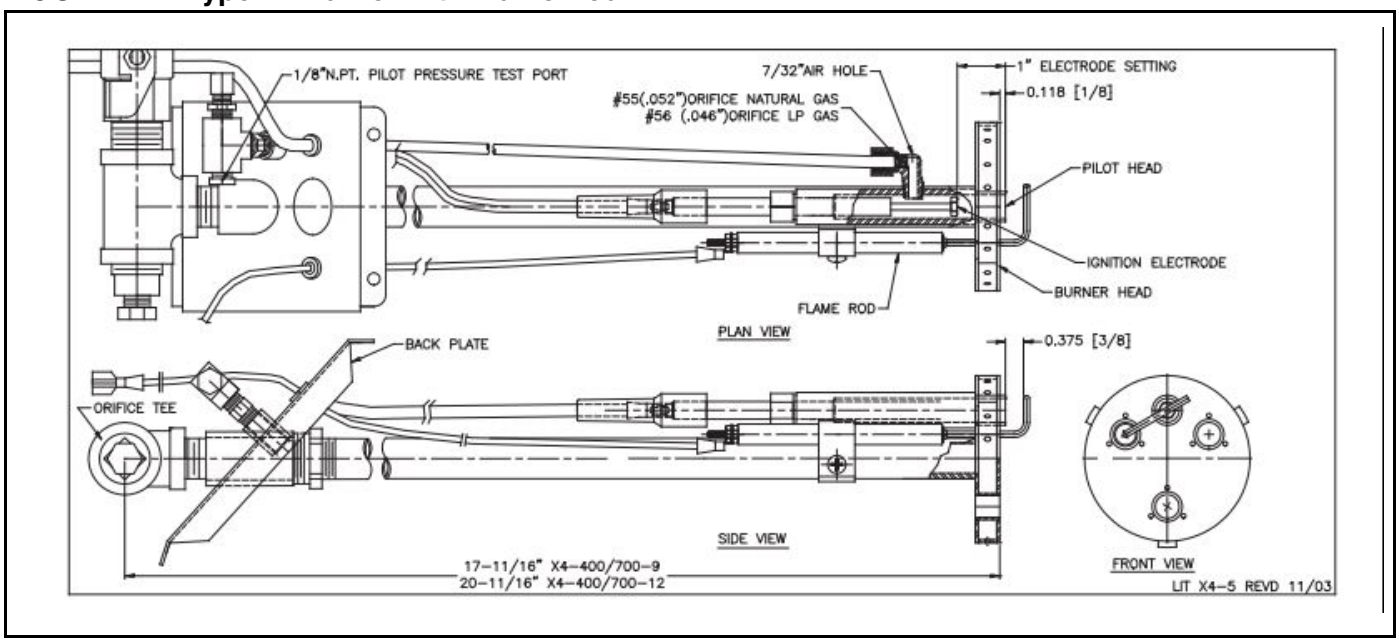

FIGURE 42: "Type C" Burner with Ignition Electrode - Natural Gas or LPG

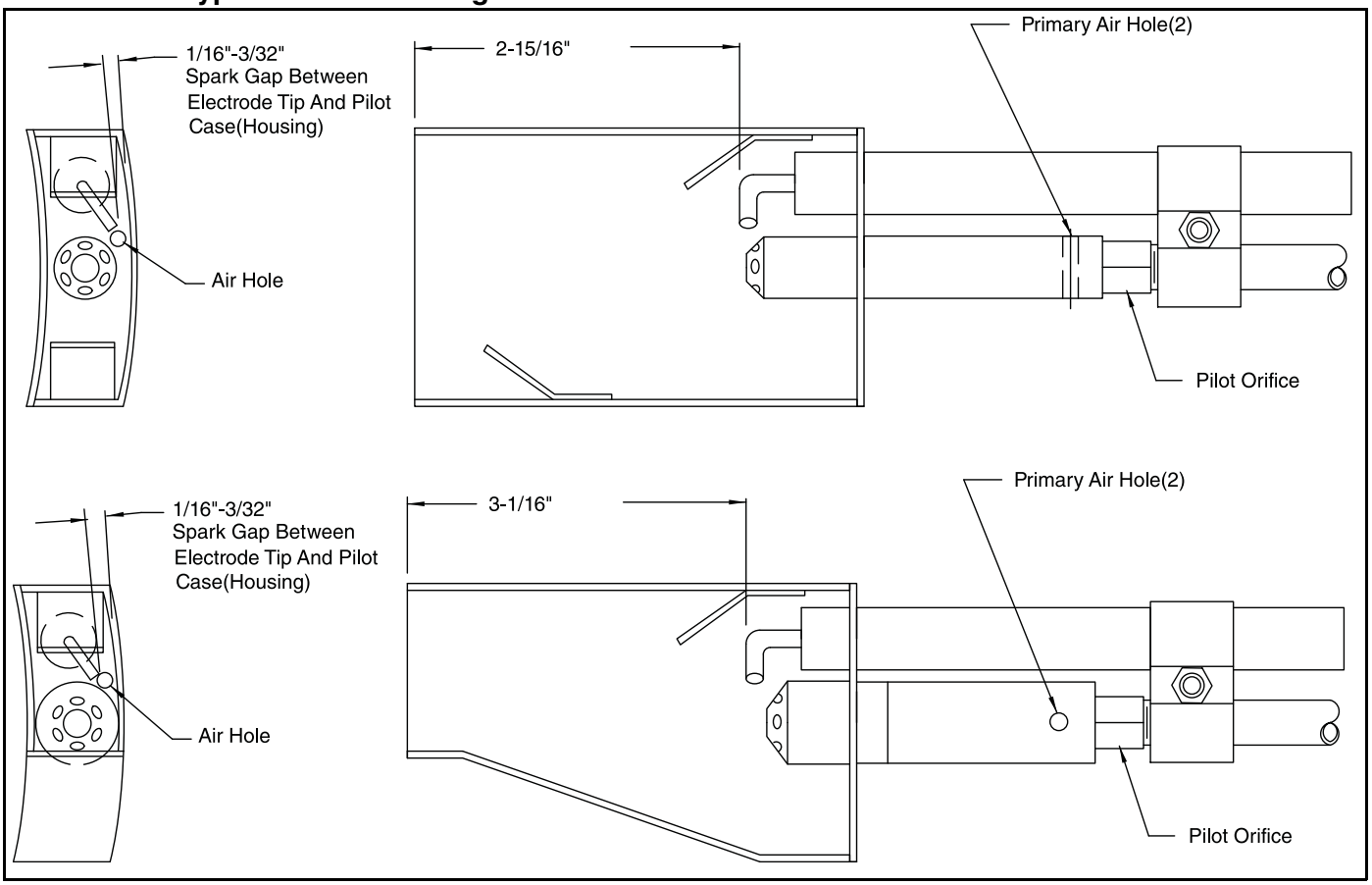

NOTE: "Type C" Gas Burner - The arc from the electrode tip should jump from the tip to the body of pilot housing and should be lined up with the hole in the backside of pilot housing, so that the blower air passing through this hole will cause the arc to flag or move around. Normal spark gap should be 1/16" (1.6 mm) - 3/32" 2.4 mm). Electrode should not be moved so far forward that the pilot flame will impinge on the porcelain insulator. This condition will cause the porcelain to crack and break off at the point of flame impingement.

15.3 Ducting Outside Combustion Air

When ducting outside combustion air to the burner air inlet, several considerations must be taken in account:

- Temperature variations when using outside fresh air: Changes in air temperature affect density of the air and the volume of air delivered to the combustion process. This must be taken in account when performing combustion performance. For example: For each 30 °F (33.3 °C) change in the air temperature, a 1% change in the oxygen reading will be experienced.
- Condensation in the fresh air duct: A drain connection is required in the lowest point of the duct or the duct must be pitched a minimum of a 0.25" (.6 cm) per foot (30.5 cm) away from the burner for condensate drainage.

SECTION 16: GAS PIPING FOR GAS-FIRED AIR HANDLERS

⚠WARNING

Explosion Hazard

Leak test all components of gas/oil piping before operation.

Gas/oil can leak if piping is not installed properly.

Do not high pressure test gas/oil piping with air handler connected.

Failure to follow these instructions can result in death, injury or property damage.

16.1 Gas Manifolds

All gas piping to the air handler must comply with:

United States: Refer to NFPA 54/ANSI Z223.1-latest revision, National Fuel Gas Code for natural gas and LPG units.

Canada: Refer to CSA B149.1 - latest revision, Natural Gas and Propane Installation Code for natural gas and LPG units.

Air handlers are available with either of the options of manifolds stated below or a manifold for compliance to both.

- Factory Mutual (FM)/Underwriters Laboratories (UL) Compliant
- XL Insurance (former Industrial Risk Insurers[IRI]) Compliant

16.2 Gas Piping and Pressures

The air handler is equipped with a gas manifold suitable for connection to supply pressure of up to 1 PSIG (68.9 mbar). When gas supply exceeds this maximum gas pressure, an additional high pressure gas regulator will be required to insure that the correct gas pressure is supplied to the regulator. Pressure should be measured between the high pressure gas regulator and safety shut off valve.

For minimum inlet gas pressures refer to the rating plate affixed to each individual air handler.

FIGURE 43: Manifold Diagram for Gas-Fired Air Handler with any FM-Compliant Manifold/XL-Compliant Manifold Rated for Less Than 1,000 MBH (293 kW) and with Modulating Burner

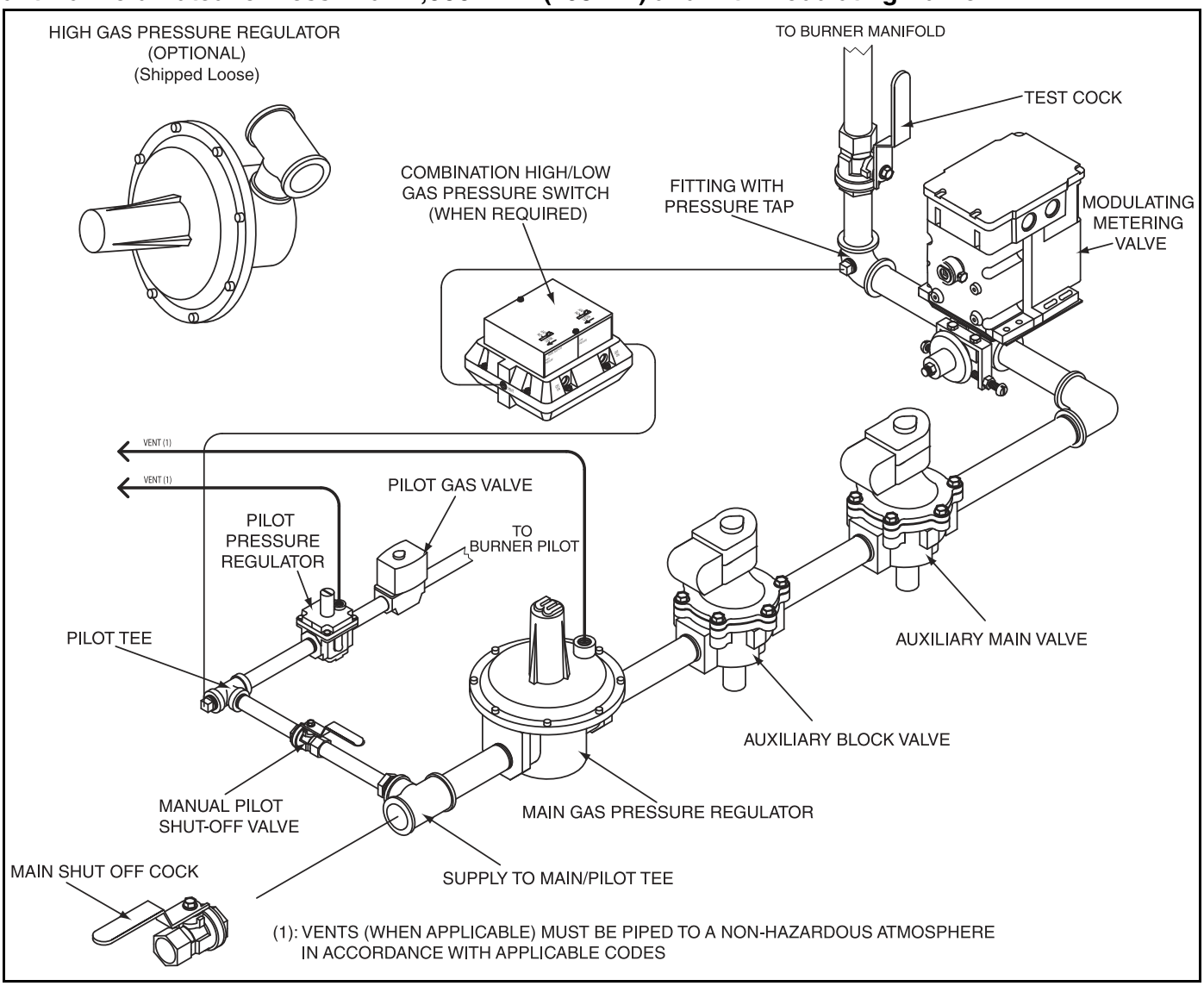

Configuration of components subject to change with Model Size and orientation.

FIGURE 44: Manifold Diagram for Gas-Fired Air Handler with XL-Compliant Manifold Rated for More Than 1,000 MBH (293 kW) and with Modulating Burner

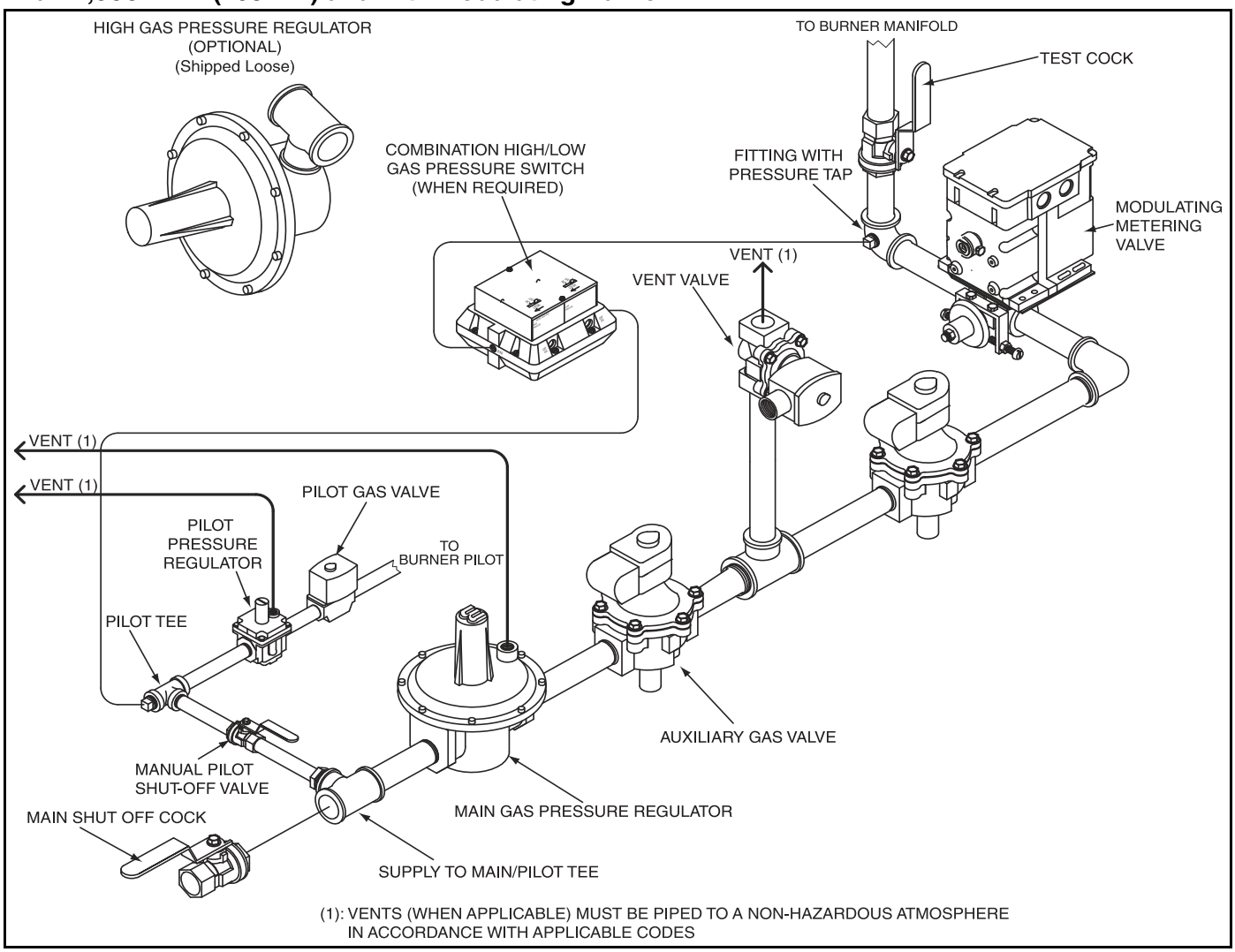

Configuration of components subject to change with Model Size and orientation.

16.2.1 Main Gas Regulator Venting

The main regulator used on 1¼" NPT and larger manifolds must be piped to the atmosphere outside the structure.

16.2.2 Vent Line Installation

The following may be used as a guideline for installation, but all applicable codes and regulations must be followed.

- Natural gas and LPG are toxic and flammable substances. They must be released where they will not cause personal injury or property damage. The end of the vent line must be located where it is safe to release gas.
- Pipe the vent line outside the structure.
- Use as short a vertical run of pipe as possible.
- Do not run pipe from a high point to a lower point to avoid obstacles.
- Use a minimum number of bends.
- Do not downsize the pipe from the origination point (must be same size or larger).
- Make sure vent line is free from obstructions.
- Do not group lines together into a common header.
- The outside termination must have a weatherproof cap or be directed downward for protection from the elements and must be screened to prevent the entry of any objects.

16.3 Gas Piping

The factory piping terminates with a female pipe connection in the pilot take off tee. The gas manifold must be extended through the side of the control cabinet. Be sure that the fuel supply pipe connected at this point is large enough to ensure the proper gas flow and line pressure at the inlet of the unit. The piping must comply with:

United States: Refer to NFPA 54/ANSI Z223.1 - latest revision, National Fuel Gas Code.

Canada: Refer to CSA B149.1 - latest revision, Natural Gas and Propane Installation Code.

Gas supply piping must conform to best building practices and local codes. During installation of the gas piping, be sure that no piping restricts accessibility to the air handler or its removable access doors.

Lockable manual shut-off valve must be added by the installer in compliance with Occupational Safety and Health Administration (OSHA) regulations.

16.4 Pressure Test Ports

There are 3/8" NPT and 1/4" NPT pressure test ports located on the manifold. The test ports are available to measure the manifold inlet gas pressure and the burner gas pressure during burner setup.

16.4.1 Burner Gas Pressure - 1/4" NPT

The pressure test port for measuring burner gas pressure is located at the burner inlet orifice tee. Refer to the air handler rating plate for the burner pressure required for high fire. *See Page 50, Figure 45*.

FIGURE 45: Location of Side Orifice

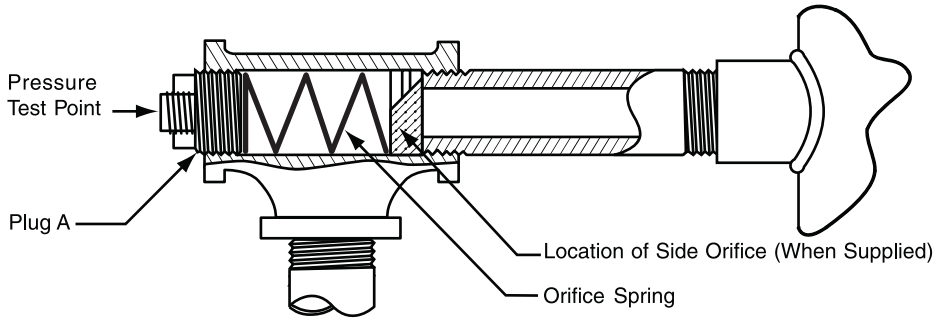

16.5 Line Pressure Test - Leak Testing

The air handler and its individual shut-off valve must be disconnected from the gas supply piping systems during any pressure testing of that system at test pressures in excess of 1 PSIG (68.9 mbar). The air handler must be isolated from the gas supply piping system by closing its individual manual gas valve that is located immediately upstream of the safety shut-off gas valve.

SECTION 17: ELECTRICAL

⚠ DANGER

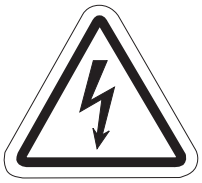

Electrical Shock Hazard

Disconnect electric before service.

More than one disconnect switch may be required to disconnect electric from equipment.

Equipment must be properly grounded.

Failure to follow these instructions can result in death or electrical shock.

Each air handler is equipped with a wiring diagram which will vary depending on the type of controls and options supplied.

Note: Spark testing or shorting of the control wires by any means will render the transformers inoperative.

17.1 Wiring and Electrical Connections

All electrical wiring and connections, including electrical grounding, must comply with;

United States: Refer to National Electrical Code®, NFPA 70 - latest revision. Wiring must conform to the most current National Electrical Code®, local ordinances, and any special diagrams furnished.

Canada: Refer to Canadian Electrical Code, CSA C22.1 Part 1 - latest revision.

Check rating plate on air handler for supply voltage and current requirements.

If any of the original control wire supplied with the air handler must be replaced, replace it with type THHN 221 °F (105°C), 600 V, 16 gauge wire or equivalent. For all other wires, replace with the equivalent size and type of wire that was originally provided with the air handler.

17.2 Remote Panel

All power supply and motor wiring must be type THWN - or equivalent, minimum with a 167 °F (75 °C) temperature rise. For wire gauge sizes, *See Page 51, Table 9*.

17.2.1 Remote Panel Mounting Distance

If the interconnection wiring between the remote panel and the air handler control enclosure is run in a single conduit, the wire run can be as long as 200' (60.9 m). For longer wire runs, consult the factory. Care should be used to avoid running the interconnect wiring near large industrial loads or high voltage wire runs as that may further limit the length of the interconnect wire run.

Table 9: Control Voltage Wiring For All Control Systems

VOLTS	WIRE GAUGE	WIRE FEET
120	18	150
120	16	250
120	14	350

NOTE: Wiring for temperature controls must be run in shielded cable as indicated on the wiring diagram.

17.2.2 Low Voltage Control Wiring

Low voltage (24V - AC/DC) control wiring in excess of 100' (30.5 m) in length should be in its own separate conduit run to prevent interference.

17.3 Motor Current Draw

For current requirements of the motor, see rating plate located on the blower motor.

17.4 Control Current Draw

The maximum current draw for an air handler's controls and accessories is 4.5 A.

17.5 Safety Systems

Safety systems are required for proper performance of the air handler. The air handler shall not be permitted to operate with any safety system disabled. If a fault is found in any of the safety systems, then the system shall be repaired only by a contractor qualified in the installation and service of indirect fired heating equipment, using only components that are sold and supplied by Weather-Rite LLC. *See Page 52, Table 10* for a brief description of each safety device, its location and its switching voltage.

Table 10: Safety Systems

Safety Controls	Location	Voltage
Fan / Limit Switch	Air Handler Control Enclosure	120
Auxiliary Manual Reset High Temperature Limit Switch	Air Handler Control Enclosure	120
Cabinet Airflow Switch	Air Handler Control Enclosure	120
Gas Pressure Switches	Air Handler Gas Train	120
Flame Control	Air Handler Control Enclosure	120

17.5.1 Fan / Limit Switch

The fan / limit switch acts as a blower control and a high temperature control. It combines the function of a high temperature limit control with that of a fan controller. It has two control relays: one controls the air handler's blower and the other acts as a high temperature controlling relay. The fan relay has two settings or set points - one for turning on the air handler's blower and one for turning it off. The limit's relay only has one set point.

The fan portion of the switch has its set point set at 120 °F (48.8 °C). After the air surrounding the heat exchanger reaches set point, the fan relay closes and power is supplied to the air handler's blower motor starter coil, which turns the blower motor on if it is not already running. If the sensor for the fan relay cools down below its set point (based on the second set point), it will open shutting down the air handler's blower if required. The second set point for the fan portion of the switch is labeled "HYS" which stands for Hysteresis. This is the degrees below the fan set point at which the relay will open. A setting of 15 °F (8.3 °C) is recommended for this equipment.

***Note**: This feature of the fan/limit switch could cause the air handler's main blower to cycle on and off a number of times after a heating cycle ends to cool down the heat exchanger. This could continue even with other controls turned off. Only turning off the main power disconnect will disable the feature.*

The limit portion of the switch has its set point set at 200 °F (93.3 °C). After the air surrounding the heat exchanger reaches set point, the limit relay will open the circuit to the burner system and discontinue all burner functions. Restarting of the burner can only be accomplished after the sensor for the limit has cooled down below its set point.

17.5.2 Pressure Switches

17.5.3.1 Cabinet Airflow Switch

The cabinet airflow switch monitors the airflow through the blower section of the air handler; its function is to protect the air handler and downstream components from improper low airflow conditions. The burner is allowed to function via the warm-up bypass timer contacts even though the blower may not be running. Once the air handler's blowers are turned on, the air handler's airflow switch closes and the warm-up bypass timer completes its time out cycle, removing the bypass circuit. This only allows the burner to function as long as airflow is present throughout the air handler (except during warm-up).

17.5.4.2 Gas Pressure Switches

Gas pressure switches are standard on certain models (UL & FM compliant gas trains above 2,500 MBH and XL compliant gas trains above 400 MBH) and are also available as an option on the others. The version used combines the function of both into one component.

The function of the gas pressure switches is to protect against insufficient, lack of gas pressure and excessive pressure in the system.

On the low gas pressure switch side, this switch opens its internal switch which shuts the burner down and prevents its operation due to insufficient gas pressure.

On the high gas pressure switch side, its internal switch will open, shutting down the burner due to excessive gas pressure passing through the gas train.

The settings of the gas pressure switches are field adjustable. The one monitoring the incoming gas pressure is the low gas pressure switch. The low gas pressure switch must be set to the minimum required gas pressure as indicated on the data plate.

The high gas pressure switch must be set to 1" wc (2.5 mbar) above the high fire setting established during commissioning.

If either switch senses a pressure which is lower (low gas pressure switch) or higher (high gas pressure switch) than its set point, then the switch will open and lock out, shutting the burner down. The switch will have to be reset manually, once the condition has been corrected.

17.5.5 Flame Control

When a flame signal from the pilot flame is available, it will allow the main gas valve to open.

If the pilot flame (gas-fired) is not present, the electrical signal cannot be continued so the pilot

valve (gas-fired) will close. If ignition does not occur, the flame safeguard relay will lockout, and must be manually reset.

17.5.6 Discharge Temperature Sensor

This device senses the discharge temperature of the air handler. The discharge temperature sensor reports the discharge temperature to the burner control device. Should this system fail, the automatic high temperature limit switch will turn the burner off.

FIGURE 46: Wiring Diagram Key

NOTES:

1.) DRAWING ONLY PROVIDED TO SHOW FIELD WIRING REQUIRED BETWEEN ELECTRICAL COMPONENTS THAT ARE SHIPPED LOOSE AND AIR HANDLER CONTROL PANEL

2.) THIS DRAWING IS NOT INTENDED TO SHOW ELECTRICAL RECONNECT BETWEEN AIR HANDLER SECTIONS. SOME RECONNECT MAYBE REQUIRED BETWEEN SECTIONS SPLIT FOR SHIPMENT.

3.) INSTALLER OF FIELD WIRING AND GROUNDING TO COMPLY WITH ALL LOCAL AND NATIONAL ELECTRICAL CODE REQUIREMENTS.

4.) USE ONLY COPPER CONDUCTORS FOR FIELD WIRING. CONDUCTORS MUST BE RATED 167° F (75° C) OR GREATER.

5.) TERMINALS #60 AND ABOVE ARE DESIGNATED AS LOW VOLTAGE. ALL FIELD WIRING FOR LOW VOLTAGE ARE TO BE RUN IN SEPARATE CONDUIT(S).

6.) CONDUCTOR TIGHTENING TORQUE REQUIREMENT.
A.) CONTROL TERMINALS @ 12 in/lbs
B.) POWER DISTRIBUTION BLOCK
LINE SIDE- WIRE SIZE:
#2/0 - #6 @ 120 in/lbs
#8 @ 45 in/lbs
#10 - #14 @ 35 in/lbs
LOAD SIDE- WIRE SIZE:
#4 - #14 @ 35 in/lbs

KEY:

● TERMINAL LOCATED ON MAIN PANEL

▲ TERMINAL LOCATED ON REMOTE PANEL

□ TERMINAL LOCATED ON COMPONENT

f FIELD WIRING

SHIELDED WIRE GROUNDED

* LOCATED ON REMOTE PANEL

** SHIPPED LOOSE FOR FIELD INSTALLATION

FIGURE 47: Intelligent Controls Wiring Diagram 1 of 2

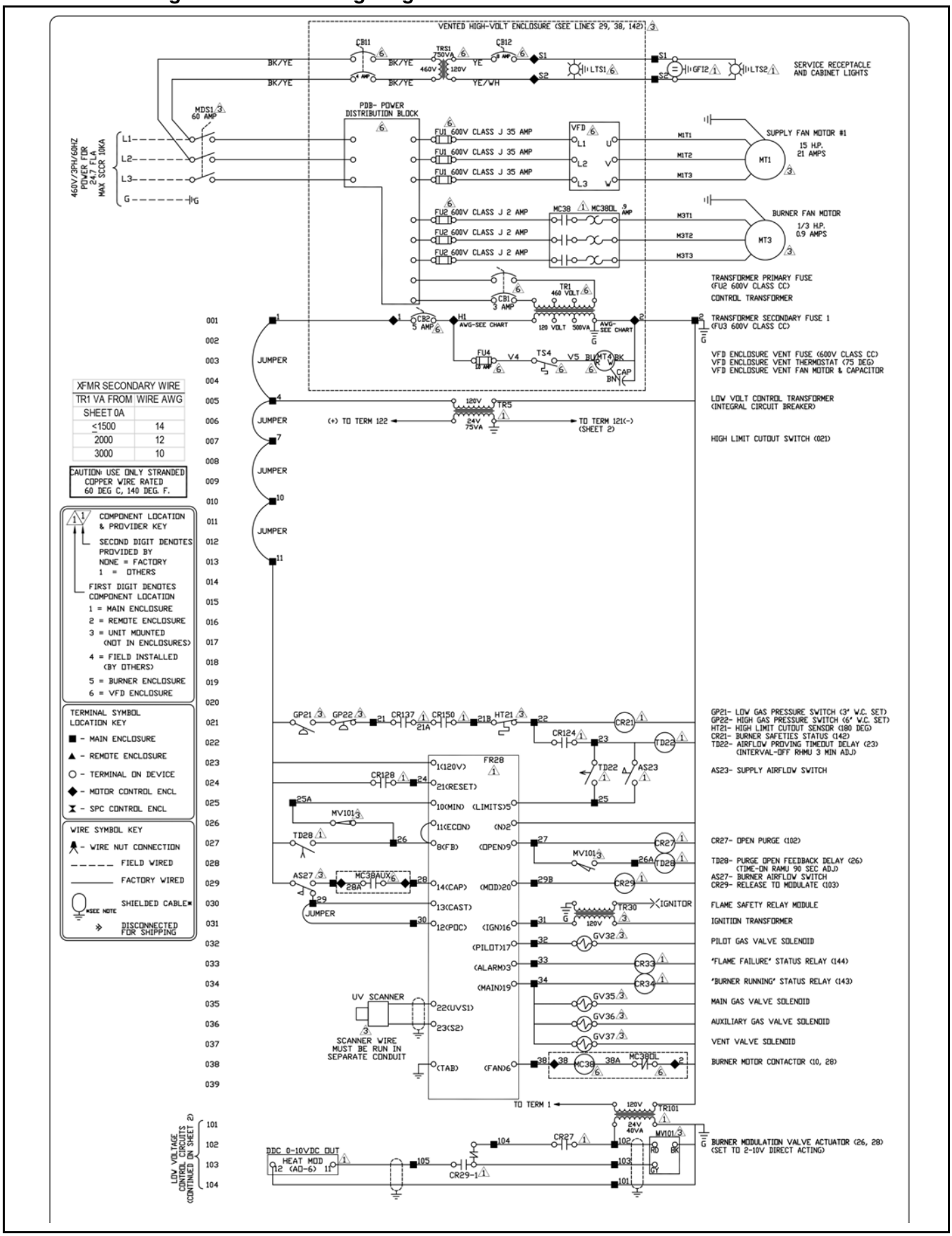

FIGURE 48: Intelligent Controls Wiring Diagram 2 of 2

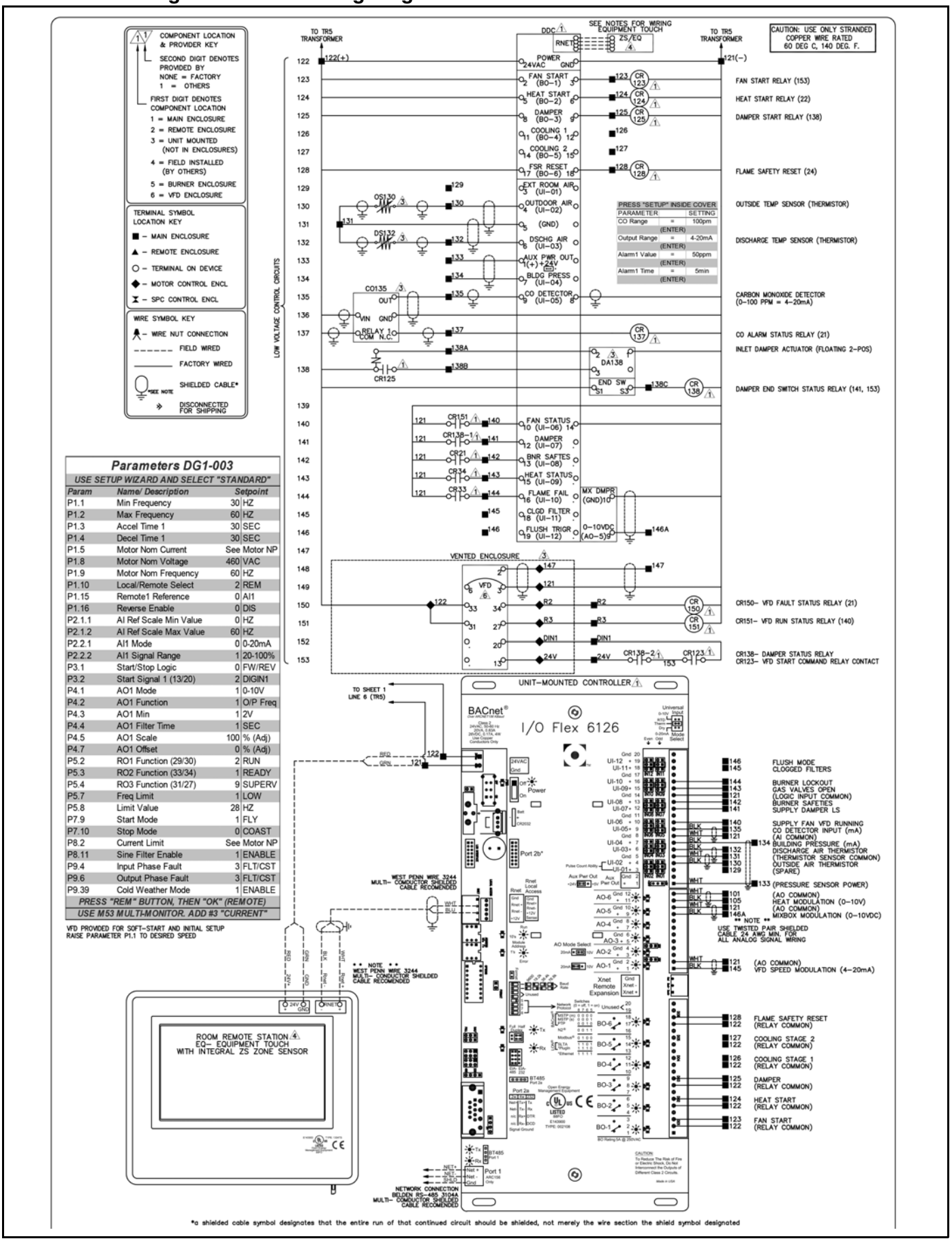

PRESS "SETUP" INSIDE COVER		
PARAMETER		SETTING
CO Range	=	100ppm
(ENTER)		
Output Range	=	4-20mA
(ENTER)		
Alarm1 Value	=	50ppm
(ENTER)		
Alarm1 Time	=	5min
(ENTER)		

Parameters DG1-003

USE SETUP WIZARD AND SELECT "STANDARD"		
Param	Name/ Description	Setpoint
P1.1	Min Frequency	30 HZ
P1.2	Max Frequency	60 HZ
P1.3	Accel Time 1	30 SEC
P1.4	Decel Time 1	30 SEC
P1.5	Motor Nom Current	See Motor NP
P1.8	Motor Nom Voltage	460 VAC
P1.9	Motor Nom Frequency	60 HZ
P1.10	Local/Remote Select	2 REM
P1.15	Remote1 Reference	0 AI1
P1.16	Reverse Enable	0 DIS
P2.1.1	AI Ref Scale Min Value	0 HZ
P2.1.2	AI Ref Scale Max Value	60 HZ
P2.2.1	AI1 Mode	0 0-20mA
P2.2.2	AI1 Signal Range	1 20-100%
P3.1	Start/Stop Logic	0 FW/REV
P3.2	Start Signal 1 (13/20)	2 DIGIN1
P4.1	AO1 Mode	1 0-10V
P4.2	AO1 Function	1 O/P Freq
P4.3	AO1 Min	1 2V
P4.4	AO1 Filter Time	1 SEC
P4.5	AO1 Scale	100 % (Adj)
P4.7	AO1 Offset	0 % (Adj)
P5.2	RO1 Function (29/30)	2 RUN
P5.3	RO2 Function (33/34)	1 READY
P5.4	RO3 Function (31/27)	9 SUPERV
P5.7	Freq Limit	1 LOW
P5.8	Limit Value	28 HZ
P7.9	Start Mode	1 FLY
P7.10	Stop Mode	0 COAST
P8.2	Current Limit	See Motor NP
P8.11	Sine Filter Enable	1 ENABLE
P9.4	Input Phase Fault	3 FLT/CST
P9.6	Output Phase Fault	3 FLT/CST
P9.39	Cold Weather Mode	1 ENABLE
PRESS "REM" BUTTON, THEN "OK" (REMOTE)		
USE M53 MULTI-MONITOR. ADD #3 "CURRENT"		

VFD PROVIDED FOR SOFT-START AND INITIAL SETUP RAISE PARAMETER P1.1 TO DESIRED SPEED

FIGURE 49: Wiring Diagram Controls by Others 1of 2

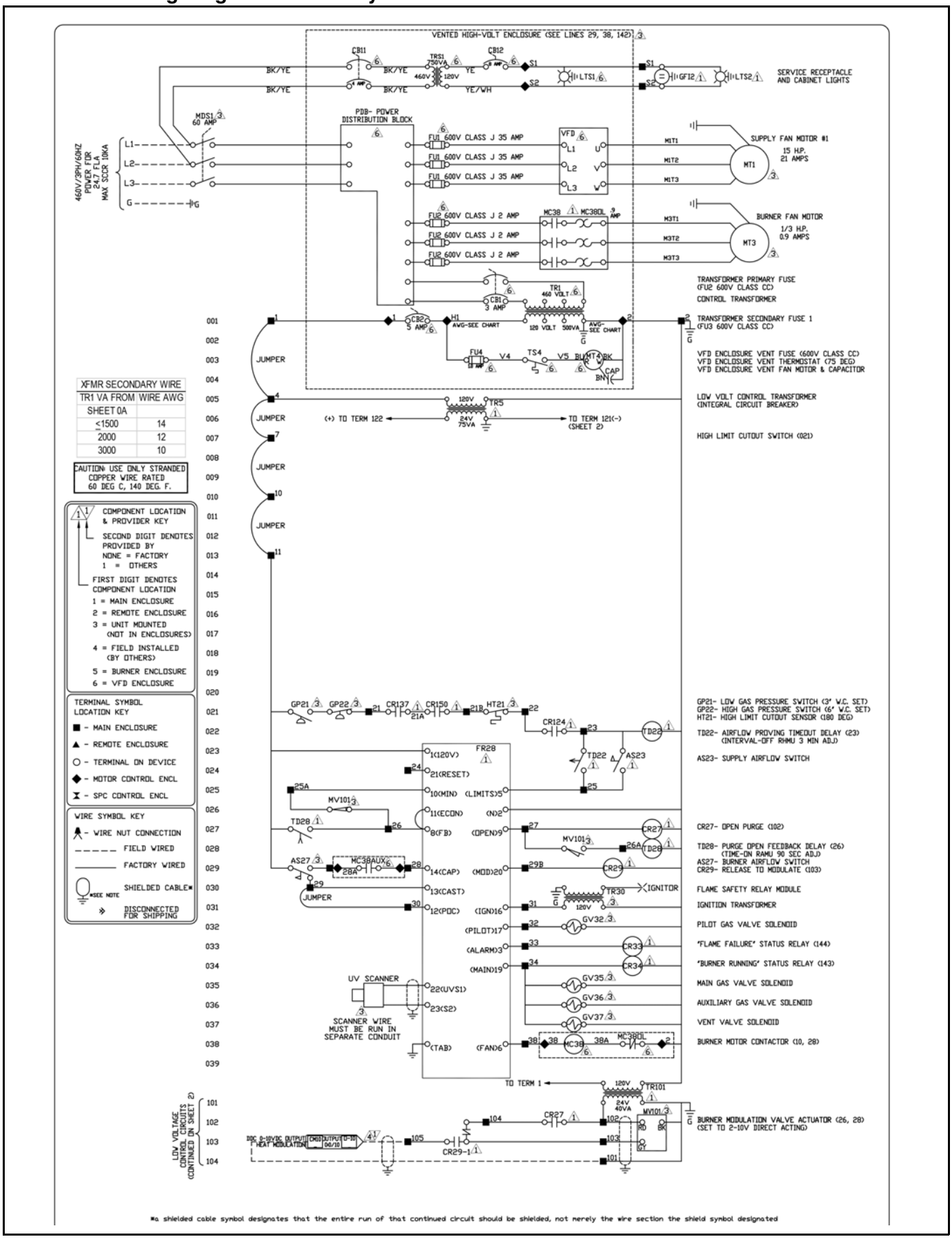

FIGURE 50: Wiring Diagram Controls by Others 2 of 2

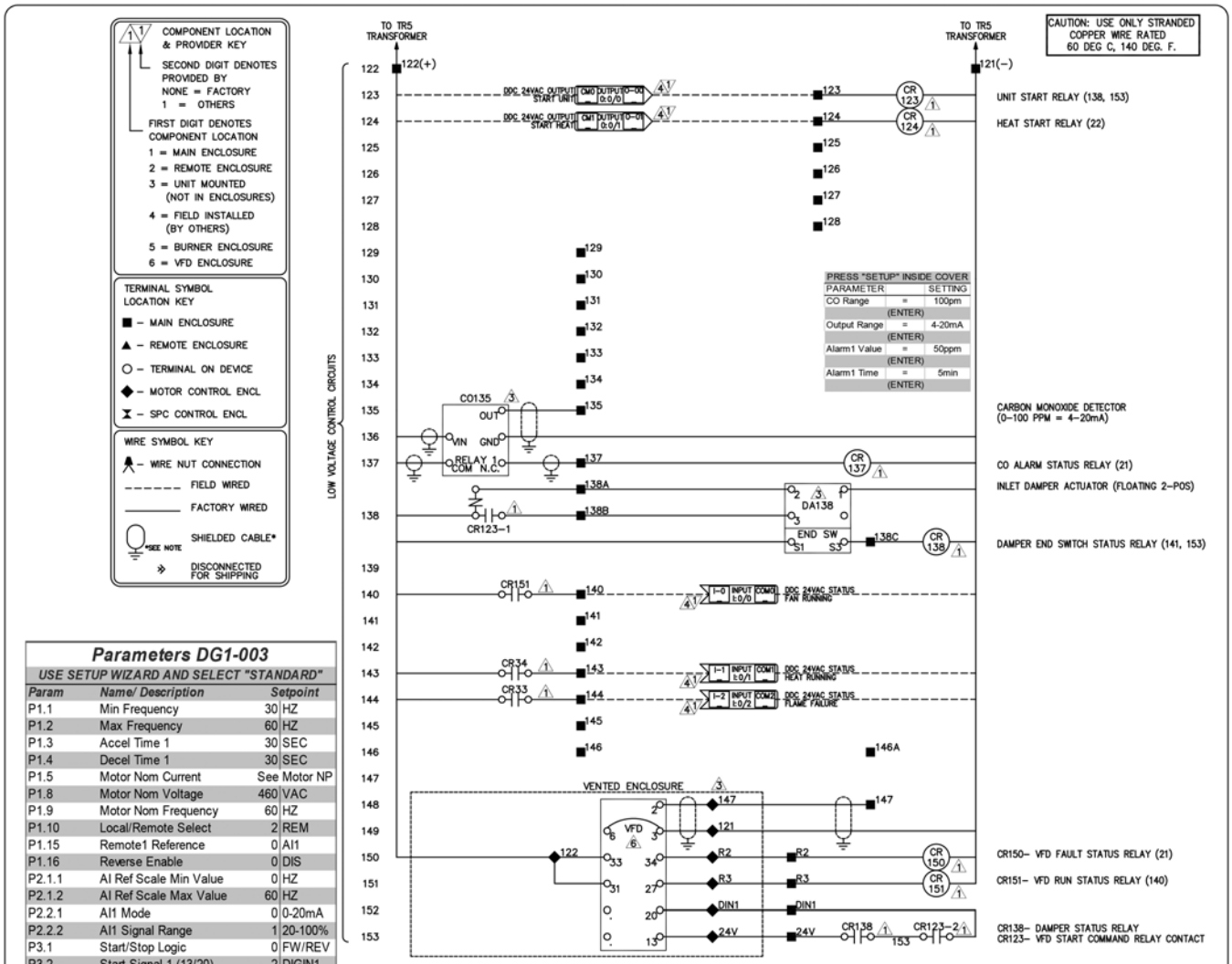

Parameters DG1-003		
USE SETUP WIZARD AND SELECT "STANDARD"		
Param	Name/ Description	Setpoint
P1.1	Min Frequency	30 HZ
P1.2	Max Frequency	60 HZ
P1.3	Accel Time 1	30 SEC
P1.4	Decel Time 1	30 SEC
P1.5	Motor Nom Current	See Motor NP
P1.8	Motor Nom Voltage	460 VAC
P1.9	Motor Nom Frequency	60 HZ
P1.10	Local/Remote Select	2 REM
P1.15	Remote1 Reference	0 AI1
P1.16	Reverse Enable	0 DIS
P2.1.1	AI Ref Scale Min Value	0 HZ
P2.1.2	AI Ref Scale Max Value	60 HZ
P2.2.1	AI1 Mode	0 0-20mA
P2.2.2	AI1 Signal Range	1 20-100%
P3.1	Start/Stop Logic	0 FW/REV
P3.2	Start Signal 1 (13/20)	2 DIGIN1
P4.1	AO1 Mode	1 0-10V
P4.2	AO1 Function	1 O/P Freq
P4.3	AO1 Min	1 2V
P4.4	AO1 Filter Time	1 SEC
P4.5	AO1 Scale	100 % (Adj)
P4.7	AO1 Offset	0 % (Adj)
P5.2	RO1 Function (29/30)	2 RUN
P5.3	RO2 Function (33/34)	1 READY
P5.4	RO3 Function (31/27)	9 SUPERV
P5.7	Freq Limit	1 LOW
P5.8	Limit Value	28 HZ
P7.9	Start Mode	1 FLY
P7.10	Stop Mode	0 COAST
P8.2	Current Limit	See Motor NP
P8.11	Sine Filter Enable	1 ENABLE
P9.4	Input Phase Fault	3 FLT/CST
P9.6	Output Phase Fault	3 FLT/CST
P9.39	Cold Weather Mode	1 ENABLE
PRESS "REM" BUTTON, THEN "OK" (REMOTE)		
USE M53 MULTI-MONITOR. ADD #3 "CURRENT"		

VFD PROVIDED FOR SOFT–START AND INITIAL SETUP
RAISE PARAMETER P1.1 TO DESIRED SPEED

*a shielded cable symbol designates that the entire run of that continued circuit should be shielded, not merely the wire section the shield symbol designated

SECTION 18: SEQUENCE OF OPERATION

⚠ DANGER

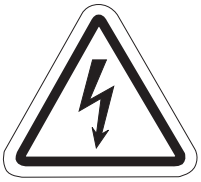

Electrical Shock Hazard

Disconnect electric before service.

More than one disconnect switch may be required to disconnect electric from equipment.

Equipment must be properly grounded.

Failure to follow these instructions can result in death or electrical shock.

18.1 Air Handler Configuration

Based on the air handler application, the air handler may be configured in any of the following styles to achieve the described functionality. These configurations are available on all air handlers. For a comparison of these configurations, *see Page 59, Table 11 and Page 59, Figure 51*.

Table 11: Configuration Chart

Heater Configuration	Air Flow	Air Volume	Control
Make Up Air (MUA)	100% Outside Air	Constant	-
Air Management (AM)	Adjustable between 100% Outside Air and 100% Return Air	Constant	Building Pressure Control or Manual Setting accessible via DDC control Network Software or Hand Held Equipment Touch Remote.

FIGURE 51: Air Handler Configurations

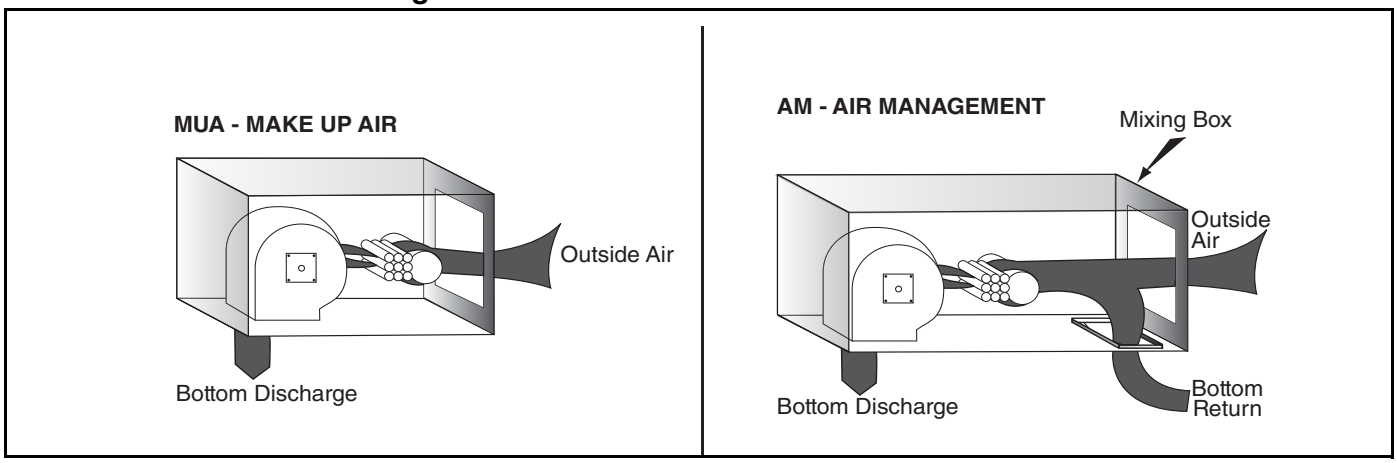

FIGURE 52: Wiring Subbase and Sequence Chart for RM7897 Burner Control Module

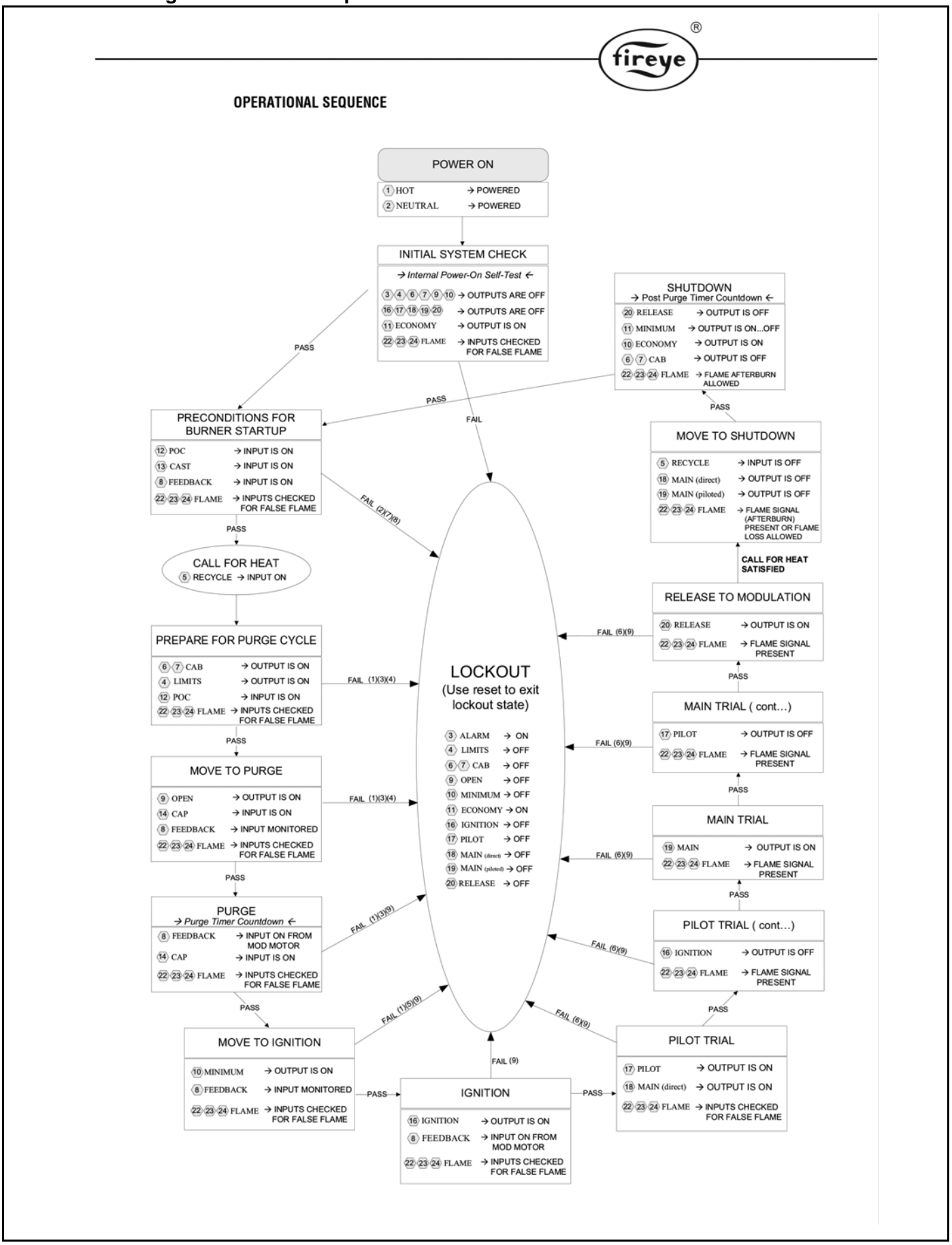

FIGURE 53: Wiring Subbase and Sequence Chart for RM7800 Burner Control Module

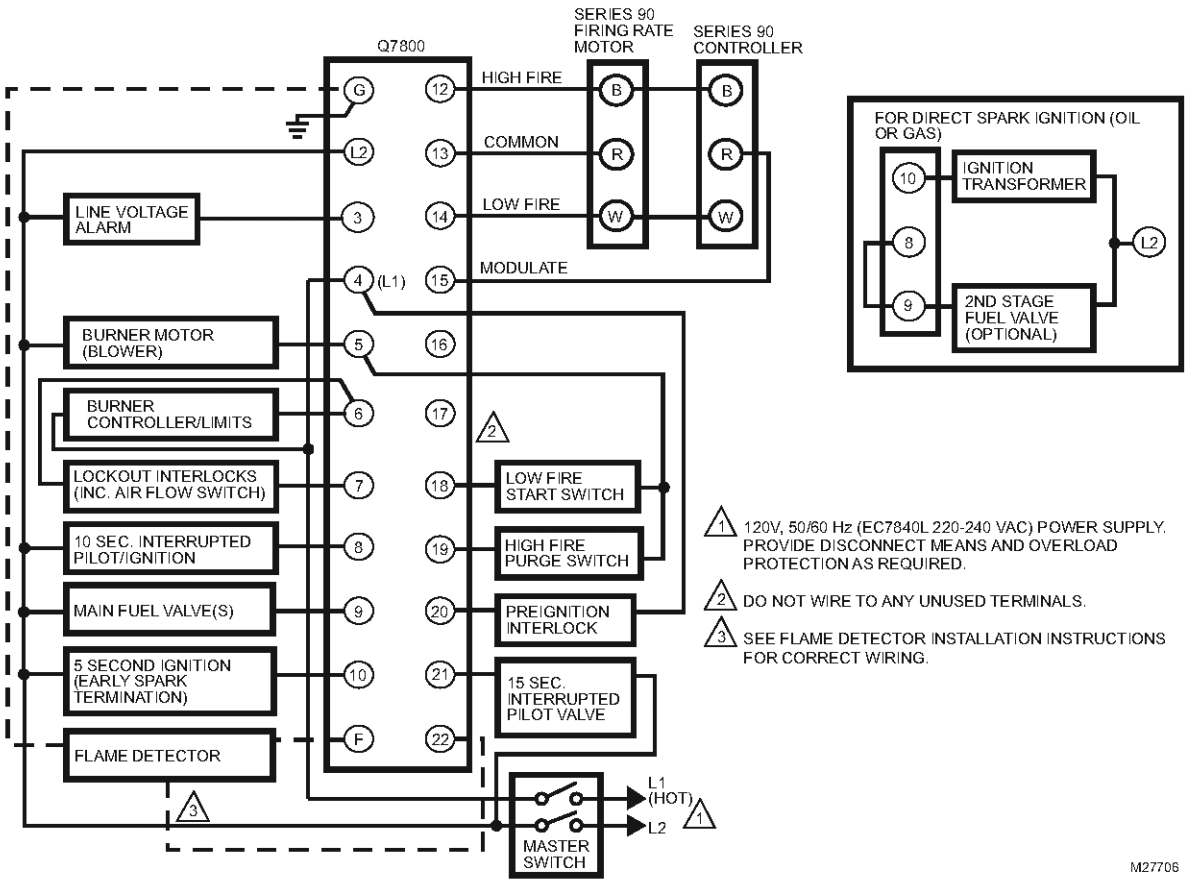

RM7800/RM7840L/EC7840L

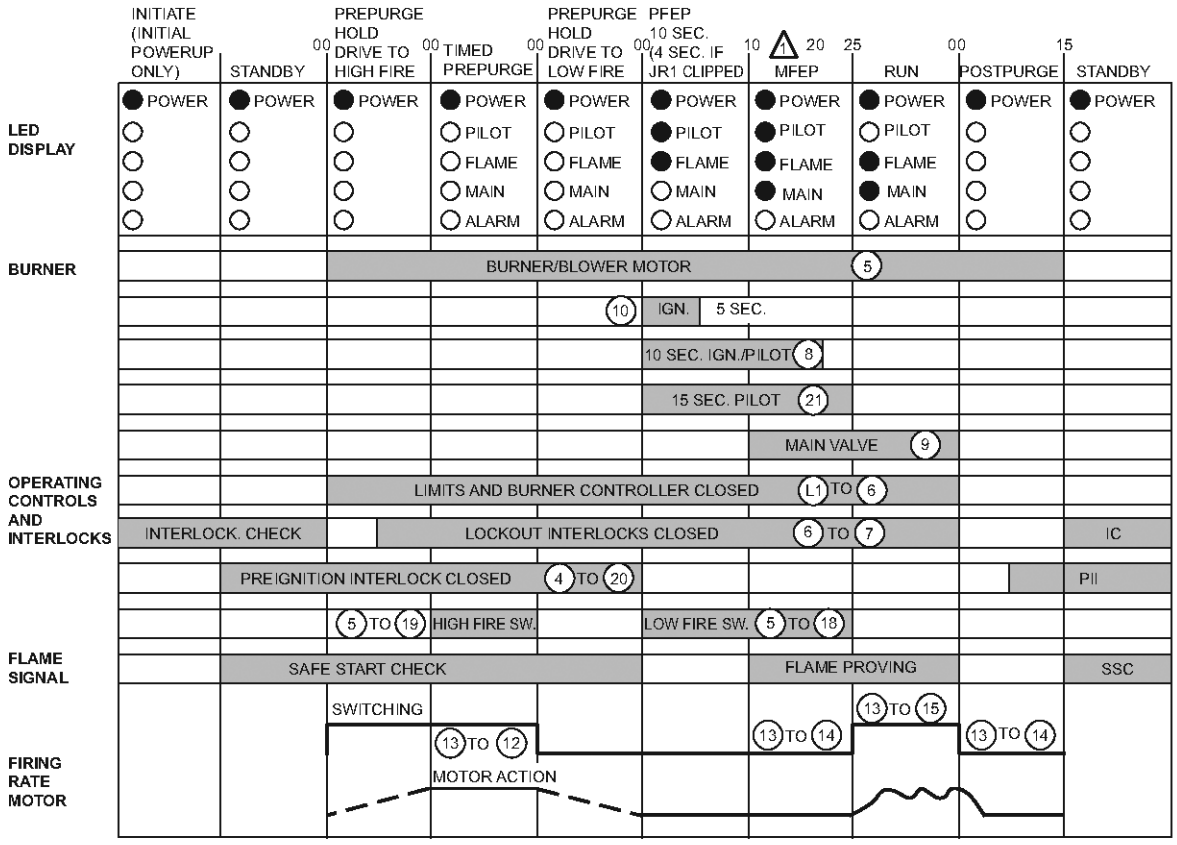

1 RM7840L1091 HAS A FOUR SECOND MFEP.

SECTION 19: SEQUENCE OF OPERATION

Air Handler Models:

"Air Management- Control the amount of outdoor air delivered to the building by modulating dampers.

"Make Up Air Model - Supplies 100% outdoor air to a building.

The available Operating Modes are as follows:

OFF

In this mode the fan is off and all outdoor air dampers are closed. The air handler continues to report status and other operating conditions.

ON

In this mode the Schedule is ignored. The fan runs continuously, and the available heating and cooling functions respond to maintain their respective settings.

AUTO

In this mode the fan is controlled by the Schedule. In the occupied period, the fan will start and run continuously, the heating and cooling functions respond to their setting. In the unoccupied period, the fan and heat will both cycle on and off as needed to maintain the unoccupied setback temperature setting. Any available cooling functions are not active during unoccupied time periods.

The Outdoor Air Control Modes are as follows:

FLUSH

Flush Mode provides 100% outside air to the building space. If the air handler is in the unoccupied period or OFF Mode, the fan will start when Flush Mode is triggered. The temperature controls respond as needed to maintain the heating and cooling set points.

MANUAL

This is Applicable only to AM Models. Whenever the fan is operating, the mixing dampers are fixed at the Manual Percent outside Air setting set by the operator, except for override conditions such as Flush Mode.

PRESSURE

This is applicable only to AM Models. A pressure transducer compares the room pressure inside the building to the pressure outside the building. Whenever the fan is operating, the dampers are automatically positioned to maintain the Auto Room Pressure setting at all times except for the following two cases:

1. Economizer is enabled

AUTO NO PRESSURE

This is applicable only to AM models. The Auto No Pressure control works identically to Auto Room Pressure mode during the heating mode. In the cooling mode the dampers drive to the Manual Percent Outdoor Air position except for the following two cases:

1. Economizer is enabled
2. Evaporative Cooling is enabled

HEATING MODE OCCUPIED PERIOD

In the occupied period the fan runs continuously. The Heating is triggered to start either on room air or outdoor air temperature and operates as follows.

1. Room Temperature Control

- If the room temperature falls below the Occupied Heat setting, the heat will start. The heat is modulated to maintain the supply air temperature to the Supply Air Max Temp setting. This condition is maintained until the room temperature reaches the Occupied Heat setting.
- The heat output resets to modulate the supply air temperature between the Supply Air Min & Max setting as needed to maintain the Occupied Heat setting based on room temperature.
- If the room temperature continues to increase and reaches the Heat Off setting, the heat is shut off. The Heat Off setting is defined by the Heat Off Above Heating setting plus the current heat setting.
- The heat operation will remain off until the space temperature drops below the Occupied Heat set point again.

2. Forced Supply Air Room Control

- If the room temperature drops below the Occupied Heat setting, the heat will start and modulate as needed to maintain the Supply Air Temperature setting.
- If the room temperature reaches the Heat Off setting, the heat will remain off until the room temperature drops below the Occupied Heat setting.

3. Outside Air Room Control

- If the outside air temperature drops below the Outdoor Air Heat On setting, the heat will start as long as the room temperature is also below the Cooling setting.
- When the heat is on, the supply air temperature is controlled as detailed above in item 1 - Room Temperature Control.
- The heat will shut off when the outdoor air reaches the Heat Off If Outside Air Above setting.
- The heat will remain off until the outdoor air temperature again falls below the Outdoor Air Heat On setting.
- The fan and heat operation are disabled in the Unoccupied Mode when this option is selected.

The Heat Off If Outdoor Air Above setting, disables the burner if the outdoor air temperature is greater than its entered value. The factory default setting is 95 degrees. This function is available in all three heating modes described above.

If the heat fails, and the supply air temperature drops below the Fan Off If Supply Air Temp Below setting, the fan will shut off and generate an alarm.

HEATING MODE UN-OCCUPIED SETBACK

During an Unoccupied Setback Period, the fan will only run when the room temperature falls below the Unoccupied Setback Temp Setting. Cooling is disabled during Unoccupied Periods.

1. Room & Forced Supply Air Control

- If the room temperature falls below the Unoccupied Setback Setting, the fan and heat will start. The heat will remain on until the room temperature reaches the Heat Off setting which is determined by the value entered for the Heat Off Above Heating setting.

2. Outside Air Room Control

- The fan and burner are disabled in the Unoccupied Setback period when this option is selected.

19.1 Heating Types

Steam or Hot Water

Control of a Steam or Hot Water Coil is done with an analog output from the controller. The fan start is delayed for 60 seconds to allow for coil warm up if there is a call for heat. When in the Heating mode, the controller will modulate the heating coil as described in the different Heating Modes. For Steam or Hot Water heat to function it must be enabled.

19.2 Cooling Types

Economizer Cooling

Economizer Control must be selected to function. You can select Dry Bulb, Enthalpy, or No Economizer Control. "No Economizer Control" is the default.

Dry Bulb (AM Models)

The Dry Bulb Economizer is always available. Its logic assumes that it is always desirable to use outdoor air for cooling whenever the outdoor air temperature is below a user-specified value for the Dry Bulb Economizer setting. Whenever the outdoor air temperature is above the Dry Bulb Setting the air handler will operate with the amount of outdoor air determined by the Outdoor Air Control setting.

The Dry Bulb Economizer is enabled when there is no demand for heat, the outdoor air temperature is below the Dry Bulb Economizer setting and the room temperature is above the Cooling setting. If all of these conditions are met, the Dry Bulb Economizer control brings in up to 100% outdoor air to maintain the Cooling setting. When the room temperature falls below the Cooling setting, the air handler will resume damper modulation determined by the Outdoor Air Control setting.

While bringing in additional outdoor air for cooling, the room pressure may rise above the Room Pressure setting. To minimize the potential for an excessively high building pressure, consideration should be given to the installation of relief dampers. During Dry Bulb Economizer operation, the outdoor

air delivered to the space will be automatically be limited to an amount that prevents the supply air temperature from falling below the Supply Air Minimum Temperature setting.

19.3 Mechanical Cooling

The outside air damper on AM models is closed at all times during the Cooling Sequence. If an Economizer is selected the dampers will modulate as described in the Economizer Cooling section of this manual. Mechanical Cooling is available in Auto Pressure, Auto No Pressure, and Manual outside air setting.

DX Cooling Control

There are 2 stages of cooling available. When the room temperature is above the cooling set point stage 1 will energize. The additional stage of cooling will energize as the cooling demand increases.

Chilled Water Cooling Control

Chilled Water Cooing Control must be enabled to function. Upon a call for cooing and analog output modulates to maintain the zone temperature of the Occupied Space Cooling Setting.

19.4 Humidity Control

Humidity Control with a Heating-only system

The WEATHER-RITE™ Humidity Control Algorithm (HCA) is an optional feature and must be enabled. It is only active during the Occupied Period. Once enabled, the HCA monitors the zone relative humidity continuously. If the zone relative humidity reaches the Humidity set point, the air handler is forced into the Heating Sequence, the burner is ignited and the zone temperature is raised until the zone humidity falls 5% below the Humidity set point. Raising the zone temperature causes the RH to drop and prevents condensation. This occurs independently of the Occupied Space Heating or Cooling set points and may warm the space above those set points. The supply air temperature is modulated to a maximum of 130°F until the humidity drops below the humidity set point.

To reduce operating costs during periods which the HCA is operating the burner, it may be desirable to minimize the introduction of outdoor air to the space. To accomplish this act, HCA equipped WEATHER-RITE™ units are supplied with a relief Output on the controller. The function of this output is to shut down and auxiliary exhaust system(s) connected to the WEATHER-RITE™ HCA equipped unit when the burner is in operation controlling the space humidity. If minimizing operating costs is desired, this output should utilized. If building ventilation / air quality is of a greater priority, do not connect any auxiliary exhaust to this output.

Humidity Control / Reheat with Mechanical Cooling

The WEATHER-RITE™ Reheat Control is an optional feature and must be enabled to function. It is only available when the air handler also has mechanical cooling. The reheat output is digital on / off, not modulating.

Humidity Control / Reheat with DX Cooling Control

If the zone relative humidity reaches the Humidity setting, the cooling output(s) will energize in sequence to maintain the room at the Humidity setting.

If, while the cooling is energized to control the room relative humidity and the room temperature falls below the Cooling setting, the digital Reheat Output will turn on and off to maintain the room temperature at the Cooling Setting. This output must be connected to a solenoid or relay which turns on a heating coil to warm the supply air.

Reheat with Chilled Water Cooling Control

If the room relative humidity reaches the Humidity setting, the analog cooling output modulates to maintain the room at the Humidity setting. If the room temperature falls below the Cooling setting, the digital Reheat Output will turn on and off to maintain the room temperature at the Cooing setting. This output must be connected to a solenoid or relay which turns on a heating coil to warm the supply air.

19.5 OTHER OPTIONS

Energy Alert Control

When this option is enabled, if during Occupied period, the air handler is operating in the Auto Room Pressure setting and has not been able to maintain room pressure within .01" W.C of the Auto Room

Pressure setting for 10 consecutive minutes, the Energy Alert Controls will lower the Occupied Heat setting down to the Unoccupied Set Back Setting and force the dampers to the minimum outside air position (20% outdoor air / 80% return air). This condition will be maintained for 20 minutes or until the room under pressure condition has been corrected. If either of these circumstances occurs, modulation of the dampers is returned to the Auto Room Pressure control. When it occurs, an alarm point is activated to alert the BAS of the under pressure condition.

Make Up Air Units with Variable Frequency Drive

When a VFD is installed on a MUA unit, the fan speed will be modulated between its maximum and minimum settings as needed to maintain the Auto Room Pressure setting.

Time Clock

The air handler can be controlled by more than one schedule but not at the same time. The schedule source must be selected by the operator. Selecting the schedule source is accomplished using the BACView remote via the Configuration menu, or by the 3rd party front end. See the BACView portion of this manual for more information on the BACView schedule.

Forced Occupied

If the air handler is equipped with an RS Pro Room Sensor, the unit can be forced to occupied mode by pushing the "manual on" button located on the face of the room sensor. Each time this button is pushed, it adds 30 minutes to occupied period up to a total of 4 hours. Holding the manual on button in for 3 seconds cancels the forced occupied period.

SECTION 20: START-UP PROCEDURES

⚠ DANGER

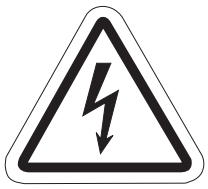	
Electrical Shock Hazard	**Severe Injury Hazard**
Disconnect electric before service. **More than one disconnect switch may be required to disconnect electric from equipment.** **Equipment must be properly grounded.**	**Do not enter equipment while in operation.** **Equipment may start automatically.** **Do not operate with door open.** **Installation, operation and service must be done by a trained technician only.**
Failure to follow these instructions can result in death, electrical shock or injury.	

⚠ WARNING

			
Explosion Hazard	**Falling Hazard**	**Burn Hazard**	**Explosion Hazard**
Leak test all components of equipment gas piping before operation. **Gas can leak if piping is not installed properly.** **Do not high pressure test gas piping with equipment connected.**	**Use proper safety equipment and practices to avoid falling.** **Do not use any part of equipment as support.**	**Allow equipment to cool before service.** **Internal components of equipment may still be hot after operation.**	**System contains R-410A refrigerant.** **Operating pressures may exceed limits of R-22 service equipment.** **Use proper refrigerant handling practices, tools and equipment.**
Failure to follow these instructions can result in death, injury or property damage.			

Installation Code and Annual Inspections:
All installation and service of WEATHER-RITE™ equipment must be performed by a contractor qualified in the installation and service of equipment sold and supplied by Weather-Rite and conform to all requirements set forth in the WEATHER-RITE™ manuals and all applicable governmental authorities pertaining to the installation, service operation and labeling of the equipment.
To help facilitate optimum performance and safety, Weather-Rite recommends that a qualified contractor conduct, at a minimum, annual inspections of your WEATHER-RITE™ equipment and perform service where necessary, using only replacement parts sold and supplied by Weather-Rite.

Check installation site to ensure all codes and engineering specifications are correct. This section of the manual is intended to be used as an instructional guide to the commissioning of the indirect fired air handler. Fill out the attached start up sheet (located at the back of the manual) as each step of the procedure is performed. This procedure should be completed by the commissioning contractor and returned to Weather-Rite.

20.1 Mechanical

20.1.1 Sheave Alignment

Sheaves are factory aligned. On all air handlers, check sheave alignment as follows.

1. Attach a string to the vertical surface next to the blower shaft bearing. (*See Page 67, Figure 54*)
2. Wrap the string around the blower sheave and across both sheave surfaces as shown.
3. Adjust until all four contact points (triangle) touch the sheave surfaces. "IN" or "OUT" adjustment of the motor sheave and/or motor adjustment may be required.
4. Pull the string away from the motor sheave and then move it slowly back towards the sheave, making sure the string remains straight while touching all contact points.
5. Remove string before turning air handler on.

NOTE: Allowances must be made for motor sheaves which are wider than the blower sheaves.

FIGURE 54: Sheave Alignment

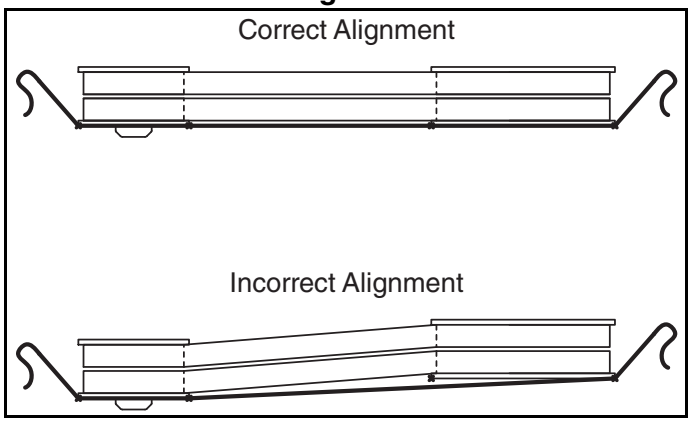

20.1.2 Belt Tension

- Belt tension should be checked with a belt-tension gauge. Follow the belt tension gauge instructions.

FIGURE 55: Belt Tension

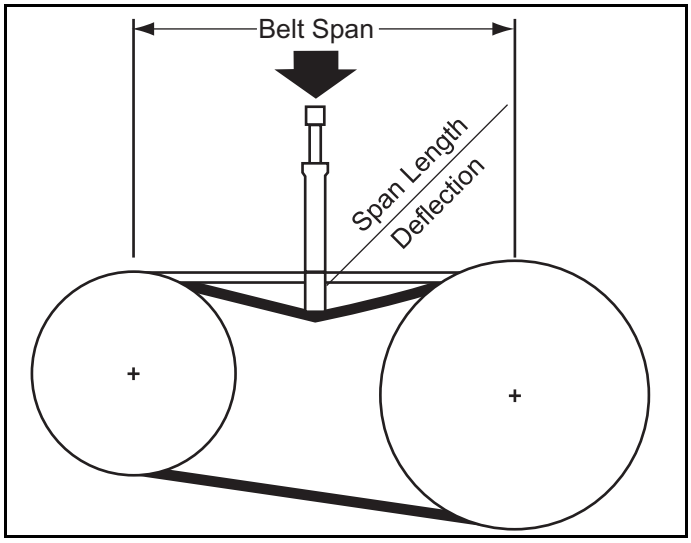

Table 12: Deflection Force of V-Belts

Belt Cross-Section	Motor Sheave Dimension Range (inches) - (cm)	TYPE B		TYPE B-X (High H.P.)	
		Min.	Max.	Min.	Max.
B	3.4 - 4.2	4	5 1/2	5 3/4	8
	4.4 - 5.6	5 1/8	7 1/8	6 1/2	9 1/8
	5.8 - 8.6	6 3/8	8 3/4	7 3/8	10 1/8

NOTE: If drive belts squeal during start-up, increase belt tension to the highest allowed value. Re-check tension during each inspection.

20.2 Electrical

1. Check motor starter for proper overload settings. The overload setting must equal the full load amps (FLA) of motor.
2. Measure the supply voltage with the air handler off and then on. For a system that is powered

with three phase power, measure the voltage of each phase.

3. Verify correct blower rotation.
4. While the blower is running and the burner is off, measure the total system current draw with an ammeter. Measure the system current draw again after the burner adjustments are made and with the burner and blower both on.
5. If applicable, compare all variable frequency drive programming parameters with specifications provided on electrical drawing.

20.3 Airflow

Factory calibrated, the air flow switches are safety devices for burner air flow. If an air flow switch does not close, the problem may not be the air flow switch. It could be an indication of an air flow problem (incorrect blower rotation, duct restrictions, etc.)

20.4 General Start-up Procedures (All Fuels)

A thoroughly qualified burner technician should be employed to provide the initial burner start up. Before beginning start up, the technician should thoroughly study and become familiar with the exact sequence of operation and all other details of the specific flame safeguard control system being used. Because of the various flame safeguard controls being utilized, a separate manufacturer's bulletin is supplied with the air handler.

Complete and/or review all precautions and inspection procedures in previous sections and burner manufacturers' literature.

Close main and manual burner shut-off valves.

Tighten all screws on terminal blocks in control cabinet in case some may have loosened during transit.

Check vent stack to ensure it is open and unobstructed.

Check rotation of main supply motor and burner blower by momentarily making contact of the motor contractors/starters. Proper rotation is imprinted on the air handler for the supply fan and on the fan housing for the burner.

Check operating controls, limit controls, flame safeguard control reset, high and low gas and/or oil pressure switches (if used) and low fire interlocks (if used) and all other applicable interlocks. All contacts should be closed (an exception would be the low gas and/or oil pressure switch.

20.5 Blower Start-Up

Place main disconnect switch in the on position and use the controller to start the fan. With the main supply fan motor running take and record its amp draw, return the selector to the off position.

20.6 Burner Start-Up

The standard burners are manufactured by Power Flame Incorporated®. The following start up information pertains to these burners. If a different manufacturer's burner is utilized, refer to the separate manufacturer's literature included with the documentation shipped with the air handler.

To help prevent unburned fuel in the heat exchanger, do not repeatedly cycle the burner. Specific instructions relative to component sequencing are provided in the flame safeguard manufacturer's bulletin which is included with the documentation shipped with the burner.

Proper test equipment must be used in order to achieve maximum system operational reliability and fuel efficiencies.

All fuel/air adjustments should be made to achieve required input rate, satisfactory combustion test values, flame stability and appearance.

20.7 Gas Pressure Adjustments

All high fire adjustments, for whatever burner type - on/off, high/low/off and full modulation are accomplished by adjusting the main gas regulator located in the gas manifold. Refer to the equipment's serial tag for proper burner manifold pressure at high fire. Manifold pressure at high fire can be found on unit rating tag.

20.8 Gas Fired Equipment Start-Up Procedures

1. Review the procedures in this section before proceeding.
2. Verify the burner air dampers are approximately 1/4" (.64 cm) open, open the main gas cock (to allow the low gas pressure switch, if supplied, to make its circuit).
3. Start the burner. The burner will go through a blower pre-purge period, At the end of the purge cycle the burner will light the pilot. With the pilot on the unit will modulate to meet operating conditions.

4. Adjust the burner as necessary to provide smooth ignition of the main flame. If the flame signal drops significantly when the main automatic gas valve opens, slightly increase the pilot gas pressure to attain a stable flame signal value.
5. Field adjustments for combustion will need to be done to ensure proper operation of burner.
6. For full modulation burners, adjust the main gas pressure regulator to nameplate rate in combination with the air damper and metering valve linkage operation to achieve 8.5 to 10% CO_2 at the full high fire input rate position. Run burner to the low fire position and lock the metering valve external adjustment to a setting that will attain 7 to 9% CO_2 at the desired low fire input rate. Check for proper combustion at the midpoint rate (7 to 9% CO_2 and 0% CO) and make sure the linkage operates smoothly and without binding or over travel of the air damper and metering valve stops. CO Air Free cannot exceed 400 PPM at 112% Max Input for Natural gas and 107% of Max Input for Propane.
7. Re-check all reset switches - burner relay, limits, pressure cut-off switches, and, if necessary, main fan & burner motor overload reset button(s). Set the room thermostat and/or duct thermostat to the desired temperatures.

NOTE: When firing natural gas and LPG, it is possible to attain CO_2 readings that appear to be acceptable (i.e., 8%, 9%, 10%, etc.) while actually producing an unsafe condition. At such CO_2 readings, a deficiency of air will create the formation of CO (Carbon Monoxide) in the flue gases. Therefore, when firing gas, test for CO to make certain that the burner is adjusted so that it has an excess, rather than a deficiency, of air, CO is a dangerous product of incomplete combustion and is associated with combustion inefficiency and increased fuel cost. O% CO (Carbon Monoxide) may not be achievable. Readings between 0 and 100 PPM are desirable with the maximum level determined by Z83.8

20.9 Accessories and Controls Start-Up

Refer to the separate manufacturer's literature included in the documentation shipped with the air handler for proper set-up and operation of other included accessories and controls.

SECTION 21: MAINTENANCE

⚠ DANGER

	
Electrical Shock Hazard **Disconnect electric before service.** **More than one disconnect switch may be required to disconnect electric from equipment.** **Equipment must be properly grounded.**	**Severe Injury Hazard** **Do not enter equipment while in operation.** **Equipment may start automatically.** **Do not operate with door open.** **Installation, operation and service must be done by a trained technician only.**
Failure to follow these instructions can result in death, injury or property damage.	

⚠ WARNING

			
Explosion Hazard **Leak test all components of equipment gas piping before operation.** **Gas can leak if piping is not installed properly.** **Do not high pressure test gas piping with equipment connected.**	**Falling Hazard** **Use proper safety equipment and practices to avoid falling.** **Do not use any part of equipment as support.**	**Burn Hazard** **Allow equipment to cool before service.** **Internal components of equipment may still be hot after operation.**	**Explosion Hazard** **System contains R-410A refrigerant.** **Operating pressures may exceed limits of R-22 service equipment.** **Use proper refrigerant handling practices, tools and equipment.**
Failure to follow these instructions can result in death, injury or property damage.			

Prior to any maintenance or service to the air handler, shut off, lockout and tagout, the electrical disconnect and fuel valve that supplies the unit in accordance with OSHA regulations and allow ample time for the air handler to cool. After maintenance is performed or unit is serviced, the unit shall be re-commissioned to the start-up procedure as outlined on *Page 66, Section 20*.

Installation Code and Annual Inspections:
All installation and service of WEATHER-RITE™ equipment must be performed by a contractor qualified in the installation and service of equipment sold and supplied by Weather-Rite and conform to all requirements set forth in the WEATHER-RITE™ manuals and all applicable governmental authorities pertaining to the installation, service, operation and labeling of the equipment.
To help facilitate optimum performance and safety, Weather-Rite recommends that a qualified contractor conduct, at a minimum, annual inspections of your WEATHER-RITE™ equipment and perform service where necessary, using only replacement parts sold and supplied by Weather-Rite.

21.1 General

First 8 Hours of Operation	Check belts and adjust as required (*See Page 67, Section 20.1.2*). Though belts were properly adjusted at the factory, they will stretch after the first few hours of operation.
First 100 Hours of Operation	Re-check belt tension and adjust if necessary.
Annual Fall Start-Up	Follow the entire start-up procedure at this time and check control settings and operation.

21.2 Unit Exterior

Cabinet Exterior	After installation, touch up scratches. Periodic painting should be done thereafter as required. The caulk around weather enclosures and over field joints should be inspected annually. Re-apply caulk as needed to maintain integrity.
Unit Location	Verify that no flammable objects, liquids or vapors are present near the air handler. Minimum clearances to combustibles around the vent pipe are significantly higher than for the air handler. *See Page 6, Section 3.1*. Do not hang anything from or place anything on the air handler. Keep the area under and around the air handler free of all objects.
Ductwork	Check flexible duct connection for deterioration. Repair as required. Minimum temperature rating for flexible duct connections must be 500 °F (260 °C).
Vent Pipe and Terminals	Look for dirt, obstructions, cracks on the pipe, gaps in the sealed areas and corrosion. Clean or replace as required. Do not use the air handler if there is dirt, sagging, cracking or distortion. Remove any carbon deposits or scale using a wire brush. If applicable, check insulation of vent pipe. Repair as required. Insulation must have a minimum temperature rating of 1000 °F (537.8 °C).

21.3 Blower Section

Blower Wheel	Inspect blower wheel and clean as necessary. A small build up of dust can cause a significant decrease in blower performance. Check for excessive vibration, repair as required.
Drive Belts and Sheaves	Check for belt ride in the groove. In multiple groove drives, belt ride should be uniform. Check groove wear area for wear. Side wall of groove should be straight, not dished out. Bottom of groove should show no signs of belt contact. Sheave alignment, set screw torque and belt tension should be checked after 8, 24, and 100 hours of initial start-up. Visually inspect belts and sheaves for excessive wear. If belts have a slick, glazed look, the belts are slipping. Check drive capacity and belt tension. Never replace only one belt in a used set, as used belts will elongate. Replace the entire set if replacement is necessary.

Blower Bearing Lubrication

1. The blower bearings should be re-lubricated every 3,000 hours of operation or 6 months, whichever occurs first. The recommended lubricant is Shell Alvania #2 or S3 grease. To re-lubricate the blower pillow block/flange bearings, be sure that the grease fittings on the bearing housing (or air handler cabinet wall in the case of extended grease lines) are clean. Apply the recommended amount of grease to the fitting with a low-pressure grease gun and add slowly while the shaft is spun by hand. Do not over-grease. Over-greasing will reduce the service life of the bearings.

Table 13: Lubrication Guide

Use a No. 2 Lithium complex base grease or equivalent*								
Hours Run per Day	Suggested Lubrication Period in Weeks							
	1 to 250 RPM	251 to 500 RPM	501 to 750 RPM	751 to 1000 RPM	1001 to 1500 RPM	1501 to 2000 RPM	2001 to 2500 RPM	2501 to 3000 RPM
8	12	12	10	7	5	4	3	2
16	12	7	5	4	2	2	1	1
24	10	5	3	2	1	1	1	1
*For EZ-Kleen series bearings, use an aluminum complex base grease.								

Motors

Inspection:

1. Inspect motor every 3 months or 500 hours of operation, which ever occurs first. Keep the motor clean and vent openings clear.

Lubrication:

1. Motors with grease fittings must be lubricated based on the table below.

Table 14: Motor Lubrication Intervals

NEMA Frame Size (Motor HP)	Rated at 1800 RPM (Hrs)
Up to 210 (3 - 5)	6,000
Over 210 to 280 (7.5 - 20)	4,750
Over 280 to 360 (25 - 50)	3,700

Note: These intervals are based on severe duty. Over lubricating bearings could result in reduced motor life.

2. A high grade ball or roller bearing grease must be used. Recommended grease for standard service is Mobil Polyrex™ EM. Other compatible greases include ChevronTexaco Polystar®, ChevronTexaco Rykon® Premium2, Pennzoil® Pen 2 and ChevronTexaco SRI.
3. Motors without grease fittings are sealed for life and do not require re-lubrication.

Instructions for Lubricating

Before greasing, be sure fittings are clean and free from dirt. Remove grease relief plug or plate and, using a low-pressure grease gun, pump in the required grease. Do not over-grease. Relubrication intervals are specified in the table above. After relubricating, allow motor to run for 10 minutes before replacing relief hardware.

NOTE: In general it is not recommended to mix greases of different brands. The mixing of different types of thickeners may destroy the composition and physical properties of the grease. In the event that a different grease is required by the end user, the following steps can be taken. Using the instructions for lubrication, open grease outlet and purge the system as much as possible of the old or unwanted grease. Repeat this same operation after 1 week of service. Consult Weather-Rite or the motor manufacturer for further recommendations on grease compatibility.

21.4 Manifold and Controls

Manifold	Annually check fuel control assembly, and internal and external piping for leaks. Relief vent lines to outdoors on fuel controls should be checked to ensure against blockage caused by insects or any other substance. Clean as required.
Air Flow Switch	An annual check of the tubes attached to the air flow switch should be made to ensure against blockage caused by insects or any other substance. Clean as required.
Electric Components	Check to see there is no physical damage on any of the electric components and verify all electrical connections are secure. Ensure equipment is properly grounded.
Temperature Sensors	Calibrate room, outdoor air, and discharge air sensors as required.

21.5 Burner

An annual inspection of the burner and components must be made to insure proper and safe operation. For the most part, the burner is self cleaning. However, if the application is extremely dirty or dusty, it may become necessary to periodically clean the burner. Refer to the burner manufacturer's literature for guidance.

21.6 Dampers

Check linkage when applicable and tighten set screws as required. All moving parts of dampers should be cleaned and then thoroughly lubricated with light molybdenum oil in aerosol can. Dampers furnished with stainless steel side seals should also have the seals lubricated generously. Dampers should then be manually operated several times until linkages and blades operate freely. Reconnect linkages and check dampers for proper operation.

21.7 Filters

Filters should be checked for dirt restriction on a monthly basis (or as required). Replace filters with filters of equal specification when they appear dirty.

21.8 Motor and Drive Components Removal and Changing of Parts

Follow proper lockout tagout procedure before working on any equipment.

Gain access to the blower and motor through access door in the fan section. First, release tension on the belts by adjusting the motor base closer to the blower pulley. Remove the belts.

To remove the motor pulley, first loosen the adjustment set screws and count the number of turns to fully close the pulley (this number will be required to re-install the pulleys to the previous adjustment) if equipped with adjustable sheaves. Open the adjustable sheaves to gain access to the shaft set screws. Loosen the set screw(s) that hold it to the motor shaft and pull away from the motor.

To remove the blower pulley, remove the bolts from the bushing and insert into the previously unused threaded holes of the bushing. Carefully press the blower pulley off the bushing, tightening the bolts evenly. Loosen the Allen Head setscrew (located on top of the keyway) and slide the pulley bushing off the shaft.

To remove the motor, first remove any guards and/or covers around motor and then remove motor pulley as described above. Disconnect the motor power wiring and conduit at the junction box in the side of the motor. Support the motor so that it will be secure when disconnected from the adjustable base. Remove the bolts that hold the motor to the adjustable base. The motor may now be removed.

SECTION 22: TROUBLESHOOTING

⚠ DANGER

	
Electrical Shock Hazard Disconnect electric before service. More than one disconnect switch may be required to disconnect electric from equipment. Equipment must be properly grounded.	**Severe Injury Hazard** Do not enter equipment while in operation. Equipment may start automatically. Do not operate with door open. Installation, operation and service must be done by a trained technician only.

Failure to follow these instructions can result in death, electrical shock or injury.

⚠ WARNING

					
Explosion Hazard Turn off gas supply to equipment before service.	**Fire Hazard** Keep all flammable objects, liquids and vapors the minimum required clearances to combustibles away from equipment. Some objects will catch fire or explode when placed close to equipment.	**Falling Hazard** Use proper safety equipment and practices to avoid falling. Do not use any part of equipment as support.	**Burn Hazard** Allow equipment to cool before service. Internal components of equipment may still be hot after operation.	**Cut/Pinch Hazard** Wear protective gear during installation, operation and service. Edges are sharp.	**Explosion Hazard** System contains R-410A refrigerant. Operating pressures may exceed limits of R-22 service equipment. Use proper refrigerant handling practices, tools and equipment.

Failure to follow these instructions can result in death, injury or property damage.

The following is divided into two basic categories - fan problems and burner problems. In some cases, they interrelate. In order to use this effectively, you should familiarize yourself with both categories.

22.1 Initial Checks

When encountering any abnormal operation or fault conditions of the equipment, all troubleshooting should start with the following initial checks. If a problem is discovered in these initial checks, it must be corrected before moving on in the trouble shooting.

1. Compare voltage and phase of supply power on site with rating plate information.
2. Review wiring between remote panel and control panel. Do the electrical connections match the supplied wiring diagram?
3. Compare gas type and supply pressure on site with rating plate information.
4. Check for proper blower rotation - on air handler and any exhaust blowers.
   - Blowers powered with a three phase motor can be reversed by swapping any two incoming power legs to the motor starter. For blowers powered by a single phase motor, refer to the motor rating plate for reversing instructions.

22.2 Supply Fan

PROBLEM	POSSIBLE CAUSE	SOLUTION
Blower motor does not run	Damper limit switch not closed or inoperative.	Repair or replace switch.
	Motor thermal over-loads tripped.	For tripped condition-reset.
	Fuses blown or missing.	Replace.
	External power source lacking.	Have incoming power lines checked.
	Motor inoperative.	Repair or replace.
Blower motor runs, but fans do not supply enough make-up air	Belts broken or loose.	Readjust or replace.
	Intake filters dirty.	Replace or clean.
	Obstruction in intake.	Check dampers for proper operation. Clear all intake passages of obstructions.
	Fan wheel loose on shaft.	Reposition and tighten.
	Access doors and panels not closed.	Close.
	Excessive discharge resistance from: Dirty filters in discharge. External dampers.	Clean filters and/or readjust dampers.
Excessive fan noise	Fan bearing	Replace.
	Fan sheave loose on shaft.	Tighten.
	Belts not adjusted.	Readjust.
	Fan wheel loose on shaft.	Reposition and retighten.
	Fan wheel rubbing.	Loosen setscrews. Reposition wheel and tighten.
	Fan wheel dirty.	Clean.
	Loose duct.	Tighten or reinforce.
	Foreign article in fan or duct.	Remove.

22.3 Burner

PROBLEM	POSSIBLE CAUSE	SOLUTION
Burner Fails to Start	Control circuit has an open control contact.	Check limits, proof of closure switch and others as applicable.
	Bad fuse or switch open on in-coming power source.	Correct as required.
	Motor overloads tripped.	Reset and correct cause for trip out.
	Flame safeguard control safety switch tripped out.	Reset and determine cause for apparent flame failure.
	Loose connections or faulty wiring.	Tighten all terminal screws and consult wiring diagram furnished with the air handler.
	Flame safeguard control starting circuit blocked due to flame relay being energized.	Possible defective scanner - replace. Possible defective amplifier -replace. Scanner actually sighting flame due to leaking fuel valve-correct unwanted flame cause. Defective flame safeguard control - replace.
	Defective blower motor.	Repair or replace.
Occasional Lockouts for No Apparent Reason	Gas pilot ignition failure.	Refer to pilot adjustment section and readjust to make certain that ignition is instant and that flame signal readings are stable and above minimum values. Use a manometer or 0 to 10 wc (24.9 mbar) gas pressure gauge on pilot test tee to make certain that pressure is as recommended.
	Gas pilot ignition and direct spark oil ignition.	Verify that there are no cracks in the porcelain and that transformer end and electrode end plug in connections are tight.
	Loose or broken wires.	Check all wire nut connections and tighten all terminal screw connections in panel and elsewhere as appropriate.
	With flame safeguard controls that incorporate the air flow switch in the non-recycling circuit, ensure that when main flame lights, the air flow switch is not so critically set as to allow occasional momentary opening of the air switch contacts.	
Occasional Lockouts for No Apparent Reason	Occasional low voltage supply.	Have local utility correct.
	Occasional low gas supply pressure.	Have local utility correct.
	Air leak in oil suction line or check valve not holding.	Correct as required.

22.4 Gas Operation

PROBLEM	POSSIBLE CAUSE	SOLUTION
Burner Motor Runs, but Pilot Does Not Light	Gas supply to burner shut off.	Make sure all manual gas supply valves are open. Automatic high pressure.
	Pilot solenoid valve not opening.	Listen and feel for valve actuation. Solenoid valve not being powered-check electrical circuitry. Replace coil or entire valve if coil is burned out.
	Defective gas pilot regulator.	Replace.
	Gas pressure too high or too low at pilot orifice.	Refer to gas pilot adjustments for correct settings. Readjust as required.
	Defective ignition transformer.	Replace.
	Incorrect ignition electrode settings.	Refer to gas pilot adjustments for correct settings.
	Defective flame safeguard control or plug in purge timing card.	Replace as required.
	Air flow switch not making circuit.	Check switch operation and correct pressure adjustment on switch If required.
	Defective air flow switch.	Replace.
	Air switch negative pressure sensing tube out of position.	Reposition as necessary.
Burner Motor Runs and Pilot Lights, but Main Gas Flame is Not Established.	Main shut off or test cock closed.	Check to make certain fully open.
	Pilot flame signal reading too low to pull in flame safeguard relay.	Refer to gas pilot settings section and readjust as required.
	Defective automatic main or auxiliary gas shut off valves.	Check electrical circuitry to valves. Replace valves or correct circuitry as required.
	Defective flame safeguard control or plug in amplifier.	Check and replace as required.
	Butterfly valve set incorrectly on modulating burner.	Readjust as required.
	Main gas pressure regulator atmospheric vent line obstructed.	Correct.
	Defective main gas pressure regulator	Replace.
	Misadjusted main gas pressure regulator	Readjust to meet required operational values.
Carbon Monoxide Readings on Gas Firing	Flame impingement on cold start-up of heat exchanger caused by excessive firing rate.	Reduce firing rate to correct input volume.
	Incorrect gas/air ratios.	Readjust burner to correct CO_2/O_2 levels, reducing CO formation to appropriate level.

Gas Operation (continued)

Gas High Fire Input Cannot Be Achieved	Gas company pressure regulator or meter operating incorrectly, not allowing required gas pressure at gas train inlet.	Have gas company correct.
	Gas cock upstream of train inlet not fully open.	Check and correct.
	Gas line obstructed.	Check and correct.
	Gas train main and/or leak test cocks not fully open.	Check and correct.
	Automatic gas valve not opening fully due to defective operation.	Replace gas valve.
	On modulating burner, butterfly valve not fully opened.	Readjust.
	Defective main gas pressure regulator.	Replace.
	Main gas pressure regulator vent line obstructed.	Check and correct.
	Normally open vent valve (if supplied) not closing when automatic gas valves open.	Check to see if valve is fully closed when automatic valves are open. Replace vent valve, if not closing fully.

22.5 BurnerPRO LED Error/Lockout Codes

NO	FAULT	LED 1	LED 2	LED 3	LED 4	LED 5	LED 6	LED 7
	OPERATION LED • = ON	FAN	OPEN DAMPER	CLOSED DAMPER	AUTO	IGNITION	FLAME	STATUS
	ICON							
1	MAIN MCU INPUT DIAG FAULT	•						RED
2	LOCAL RESET		•					RED
3	CAB_FAULT	•	•					RED
4	SUPERVISORY MCU INPUT DIAG FAULT			•				RED
5	RESET LIMIT CROSSED	•		•				RED
6	NOT USED							
7	SPI COMMUNICATION FAULT	•	•	•				RED
8	REMOTE RESET				•			RED
9	NOT USED							
10	MAIN PROGRAM SEQ FAULT		•		•			RED
11	RAM TEST	•	•		•			RED
12	SUPV PROGRAM SEQ FAULT			•	•			RED
13	INPUT READING FAULT	•		•	•			RED
14	TIMER2 FAULT		•	•	•			RED
15	CPU TEST FAIL	•	•	•	•			RED
16	FLAME LOSS PTFI	•				•		RED
17	CHECK WIRING FAULT		•			•		RED
18	SAFETY RELAY FAULT	•	•			•		RED
19	FUEL VALVE OPEN FAULT			•		•		RED
20	FLAME LOSS MTFI	•		•		•		RED
21	SAFETY RELAY WELDING FAULT		•	•		•		RED
22	SUPV SELF-TEST	•	•	•		•		RED
23	SUPV CS ROM FAIL				•	•		RED
24	FLAME LOSS AUTO	•			•	•		RED
25	SUPV RAM CHECK FAIL		•		•	•		RED
26	SUPV INTERNAL ERROR	•	•		•	•		RED
27	FLAME DETECTED SHUTDOWN MODE			•	•	•		RED
28	NOT USED							RED
29	SUPV TEMP RANGE FAULT		•	•	•	•		RED

NO	FAULT	LED 1	LED 2	LED 3	LED 4	LED 5	LED 6	LED 7
30	ROM FAILURE	•	•	•	•	•		RED
31	NOT USED							
32	CHECK MODE TIMEOUT	•					•	RED
33	STANDBY FALSE FLAME		•				•	RED
34	NOT USED							
35	SW WDT RESET			•			•	RED
36	SW RESET	•		•			•	RED
37	INPUTS WAITING TIME FAULT		•	•			•	RED
38	SUPV SW WDT RESET	•	•	•			•	RED
39	SUPV SW RESET				•		•	RED
40	HARDWARE RESET	•			•		•	RED
41	SUPV HARDWARE RESET		•		•		•	RED
42	MAIN LOOP STUCK FAULT	•	•		•		•	RED
43	SUPV LOOP STUCK FAULT			•	•		•	RED
44	SUPV TIMER2 FAULT	•		•	•		•	RED
45	MAIN AC PEAK MISSING FAULT		•	•	•		•	RED
46	SUPV AC PEAK MISSING FAULT	•	•	•	•		•	RED
47	UV PULSE INPUT MISSMATCH					•	•	RED
48	SUPERVISORY MCU ADC FAULT	•				•	•	RED
49	MAIN MCU ADC FAULT		•			•	•	RED
50	IGNITION FEEDBACK FAULT	•	•			•	•	RED
51	PILOT_FEEDBACK_FAULT			•		•	•	RED
52	MAINP_FEEDBACK_FAULT	•		•		•	•	RED
53	FEEDBACK_WAITING_TIME_EXPIRE		•	•		•	•	RED
54	MAIND_FEEDBACK_FAULT	•	•	•		•	•	RED
55	INTERRUPT DIAG FAULT				•	•	•	RED
56	FALSE_FLAME_ERROR			•	•	•	•	RED
57	POWERON_FALSE_FLAME_ERROR	•		•	•	•	•	RED
58	OPEN_FEEDBACK_READING_FAULT		•	•	•	•	•	RED
59	ADJACENT PIN SHORT FAULT	•			•	•	•	RED
60	LOCAL RESET DEBOUNCE FAULT	•	•	•	•	•	•	RED
61	POC OPEN FAULT		•		•	•	•	RED
62	STRONG UV FLAME FAULT	•	•		•	•	•	RED
63	SPI CRC FAULT					•		RED

This table shows the various required LED error/lockout codes displayed on the BurnerPRO after a fault or error has occurred.

22.6 Lockout Code Explanation

fireye®

The following list provides error code explanations to help people in the field respond more effectively to issues that arise.

NO	FAULT	POSSIBLE REMEDY
1	MAIN MCU INPUT DIAG FAULT	Initial power diagnostic failure. Make sure inputs and outputs are in the proper state at power on.
2	LOCAL RESET	User initiated manual reset or faulty reset switch.
3	CAB_FAULT	Air Prove [terminal 14] signal did not prove at the end of ignition safety time or loss of Air Prove signal during burner operation
4	SUPERVISORY MCU INPUT DIAG FAULT	"System detected voltage on terminal 16, 17, 18, or 19 at the wrong time or voltage is not present when needed. Check wiring and make sure the system is operating on a single line phase (50/60Hz)"
5	RESET LIMIT EXCEEDED	Remote reset button pressed more than 5 times in 15 minutes. User should address lockout condition. Reset functionality will be re-established in a few minutes.
6	NOT USED	
7	SPI COMMUNICATION FAULT	Reset the system to continue normal operation. Contact distributor/factory if error persists.
8	REMOTE RESET	User pressed remote reset or erratic/bouncy remote switch.
9	NOT USED	
10	MAIN PROGRAM SEQ FAULT	Replace control. Contact distributor/factory.
11	RAM TEST	Replace control. Contact distributor/factory.
12	SUPV PROGRAM SEQ FAULT	Replace control. Contact distributor/factory.
13	INPUT READING FAULT	Please check wiring and make sure the system is operating on a single line phase (50/60Hz)
14	TIMER2 FAULT	Replace control. Contact distributor/factory.
15	CPU TEST FAIL	Replace control. Contact distributor/factory.
16	FLAME LOSS PTFI	Check scanner sighting and confirm that the pilot is established during PTFI. Check fuel delivery system.
17	CHECK WIRING FAULT	"System detected voltage on terminal 16, 17, 18, or 19 at the wrong time or voltage is not present when needed. Check wiring and make sure the system is operating on a single line phase (50/60Hz)"
18	SAFETY RELAY FAULT	Replace control. Contact distributor/factory.
19	FUEL VALVE OPEN FAULT	Check wiring for POC. Fuel valves may not be fully closed.
20	FLAME LOSS MTFI	Check scanner sighting and confirm that the main flame is established during MTFI. Check fuel delivery system.
21	SAFETY RELAY WELDING FAULT	Replace control. Contact distributor/factory.
22	SUPV SELF-TEST	Replace control. Contact distributor/factory.
23	SUPV CS ROM FAIL	Replace control. Contact distributor/factory.
24	FLAME LOSS AUTO	Check wiring. Check scanner. Check fuel delivery system
25	SUPV RAM CHECK FAIL	Replace control. Contact distributor/factory.
26	SUPV INTERNAL ERROR	Replace control. Contact distributor/factory.
27	FLAME DETECTED SHUTDOWN MODE	False flame detected after the permissible afterburn period. Check boiler and fuel delivery system.
28	NOT USED	
29	SUPV TEMP RANGE FAULT	Ambient temperature below -40oC or more than 70oC
30	ROM FAILURE	Replace control. Contact distributor/factory.
31	NOT USED	
32	CHECK MODE TIMEOUT	Check mode expiration window (30 minutes) elapsed.
33	STANDBY FALSE FLAME	False flame detected during Standby state. Check wiring. Check scanner.
34	NOT USED	
35	SW WDT RESET	Internal software reset by Microcontroller. Contact distributor/factory if error persists.
36	SW RESET	Internal software reset by Microcontroller. Contact distributor/factory if error persists.

NO	FAULT	POSSIBLE REMEDY
37	INPUTS WAITING TIME FAULT	System was unable to satisfy combustion air switch test and/or proof of closure during a burner sequence. Check wiring. Check air-flow switch.
38	SUPV SW WDT RESET	Internal software reset by Microcontroller. Contact distributor/factory if error persists.
39	SUPV SW RESET	Internal software reset by Microcontroller. Contact distributor/factory if error persists.
40	HARDWARE RESET	Replace control. Contact distributor/factory if error persists.
41	SUPV HARDWARE RESET	Replace control. Contact distributor/factory if error persists.
42	MAIN LOOP STUCK FAULT	Replace control. Contact distributor/factory.
43	SUPV LOOP STUCK FAULT	Replace control. Contact distributor/factory.
44	SUPV TIMER2 FAULT	Replace control. Contact distributor/factory.
45	MAIN AC PEAK MISSING FAULT	Check Mains voltage. Contact distributor/factory.
46	SUPV AC PEAK MISSING FAULT	Check Mains voltage. Contact distributor/factory.
47	UV PULSE INPUT MISSMATCH	Replace control. Contact distributor/factory.
48	SUPERVISORY MCU ADC FAULT	Replace control. Contact distributor/factory.
49	MAIN MCU ADC FAULT	Replace control. Contact distributor/factory.
50	IGNITION FEEDBACK FAULT	System detected voltage on terminal 16 at the wrong time or voltage is not present when needed. Check wiring and make sure grounding is adequate.
51	PILOT_FEEDBACK_FAULT	System detected voltage on terminal 17 at the wrong time or voltage is not present when needed. Check wiring and make sure grounding is adequate.
52	MAINP_FEEDBACK_FAULT	System detected voltage on terminal 19 at the wrong time or voltage is not present when needed. Check wiring and make sure grounding is adequate.
53	FEEDBACK_WAITING_TIME_EXPIRE	Loss of actuator feedback for more than 10 minutes. Check wiring. Check modulation equipment.
54	MAIND_FEEDBACK_FAULT	System detected voltage on terminal 18 at the wrong time or voltage is not present when needed. Check wiring and make sure grounding is adequate.
55	INTERRUPT DIAG FAULT	Replace control. Contact distributor/factory.
56	FALSE_FLAME_ERROR	False flame detected before Ignition. Check wiring. Check scanner. Make sure grounding is adequate.
57	POWERON_FALSE_FLAME_ERROR	False flame detected at power on. Check wiring. Check scanner. Make sure grounding is adequate.
58	OPEN_FEEDBACK_READING_FAULT	System detected voltage on terminal 8 at the wrong time or voltage is not present when needed. Check wiring and make sure grounding is adequate.
59	ADJACENT PIN SHORT FAULT	Replace control. Contact distributor/factory.
60	LOCAL RESET DEBOUNCE FAULT	Local reset button held for more than 10 seconds or reset button is stuck.
61	POC OPEN FAULT	Fuel valve is open at the wrong time OR check wiring
62	STRONG UV FLAME FAULT	Scanner too close to flame. Add distance between scanner and flame OR use orifice to reduce field of view.
63	SPI CRC FAULT	Replace control. Contact distributor/factory

22.7 WEATHER-RITE™ IDFD Start-Up Procedures

Weather-Rite LLC

WEATHER-RITE™ IDFD-SERIES START-UP PROCEDURES

Start Up Date: _____ Model: _____ Serial No.: _____

Burner Invoice No.: _____ Burner Rotation Correct? _____ Fuel/Grade No.: _____

Type of Gas: Natural: _____ L.P.: _____

Installed at:		Service Company:	
Name:		Name:	
Address:		Address:	
Phone:		Phone:	
Fax:		Fax:	

Notice: The following information shall be recorded for each burner start up. Please return a copy to Weather-Rite LLC. If this document is not returned, the manufacturing date will be used as the warranty start date.

⚠ DANGER

Electrical Shock Hazard	Severe Injury Hazard
Disconnect electric before service. More than one disconnect switch may be required to disconnect electric from equipment. Equipment must be properly grounded.	Do not enter equipment while in operation. Equipment may start automatically. Do not operate with door open. Installation, operation and service must be done by a trained technician only.

Failure to follow these instructions can result in death, electrical shock or injury.

⚠ WARNING

Explosion Hazard	Falling Hazard	Burn Hazard
Leak test all components of equipment gas/oil piping before operation. Gas/oil can leak if piping is not installed properly. Do not high pressure test gas/oil piping with equipment connected.	Use proper safety equipment and practices to avoid falling. Do not use any part of equipment as support.	Allow equipment to cool before service. Internal components of equipment may still be hot after operation.

Failure to follow these instructions can result in death, injury or property damage.

Weather-Rite LLC WEATHER-RITE™ IDFD-SERIES START-UP PROCEDURES (continued)

GAS-FIRED

Gas Pressure at Train Inlet
Burner in off position _____ " W.C.

Gas Pressure at Train Inlet
Low Fire _____
High Fire _____

Gas Pressure at Firing Head
Low Fire _____
High Fire _____

Gas Pressure at Pilot Test Tee
_____

Power Supply
Volts: _____
Ph.: _____
Hz. _____
Control Circuit Volts: _____
Blower Motor Amps at High Fire: _____

Flame Signal Readings
Pilot _____
Low Fire _____
High Fire _____

CO2 or O2(Specify)
Low Fire _____
High Fire _____

CO
Low Fire _____
High Fire _____

Input Rate BTU/HR
Low Fire _____
High Fire _____

Tank Pressure
High Fire _____

Net Stack Temperature
Low Fire _____
High Fire _____

Combustion efficiency
Low Fire % _____
High Fire % _____

Weather-Rite LLC WEATHER-RITE™ IDFD-SERIES START-UP PROCEDURES (continued)

CONTROL SETTINGS

General

Fan Limit (Fan switch set to 110, Limit set at 200, HYS Pot set at 20	
Burner Air Flow Operating	
Full Mod. High Fire Purge	
Full Mod. Low Fire Start	
Full Mod Cycling On/Low Fire Start	
Freeze Stat: 3 Min.- 35	
Outdoor Stat: 65	

Gas

Low Gas Pressure Switch	
High Gas Pressure Switch	

Oil

Low Oil Pressure Switch	
High Oil Pressure Switch	

[ ] Check all door seals and latches. Confirm the latch is adjusted for proper tension.

[ ] Check control lights for proper operation (if applicable).

[ ] Check temperature control location.

[ ] Check temperature sensor mounting.

[ ] Check incoming power supply (line voltage) before turning on unit disconnect.
(NOTE: for 3 phase, voltage should be measured from line to line)

Leg1-2 [ ] Leg1-3 [ ] Leg2-3 [ ] /60/ Phase

[ ] Record nameplate voltage from serial tag.
Voltage [ ] Phase [ ] 60Hz
(NOTE: This must match incoming power supply. If not, contact Weather-Rite LLC.)

[ ] Record serial and electrical drawing number from the serial tag on the door of the unit.

Serial No. [ ] Electrical Drawing No. [ ]
(NOTE: Refer to this number when contacting Weather-Rite LLC on all service questions relating to the unit.)

[ ] Record full load amps (f.l.a.) for the voltage matching the service voltage on all motors and set overloads.

Supply Motor	f.l.a.	Overloads set at	
Exhaust Motor	f.l.a.	Overloads set at	

[ ] Check the belt tension on supply blower. Adjust if necessary.
(NOTE: Belt should not move more than 1/2 inch)

[ ] Locate pilot gas line and open pipe plug to bleed off main gas line.

[ ] After bleeding, connect pressure gauge to the gas line where the plug was removed and measure
Record pressure [ ] w.c.
(NOTE: If pressure is more than 28" of water column (1 LB), a pressure regulator is required. Consult service manual for

[ ] Insure pilot and main gas valves are off

Weather-Rite LLC WEATHER-RITE™ IDFD-SERIES START-UP PROCEDURES (continued)

START-UP "NO HEAT"

[ ] Place all disconnects in "on" position and test for 120 V on transformer secondary to ground before selector switch to "SUMMER" mode. The unit will start up in the "no heat" mode.

[ ] Check for correct rotation of supply blower. (Reverse if necessary).

[ ] Check for the correct rotation of exhaust fan motor(s). (Reverse if necessary)(If applicable).

[ ] Measure and record amp draws.

SUPPLY BLOWER MOTOR

Leg 1 [ ] Leg 2 [ ] Leg 3 [ ]

Set overloads 10% above the amp draw, but not more than 10% above motor nameplate.

Measure and record RPM of blower: [ ]

[ ] Note ambient air temperature, with the unit running in the "no heat" mode. Ambient air temperature:

[ ] Check to see that only the pilot shut off valve is open and burner valve is off. Reset the optional low gas switch if the unit is equipped with it and jumper out the optional high gas pressure switch if the unit is

[ ] Start the burner. Move the selector switch to "Winter" or "Heat"

[ ] After pilot lights, check flame signal. Read and record the D.C. voltage. Do a visual inspection of the pilot and make any adjustments if needed.

[ ] D.C. Volts

[ ] Open main shut off valve; visually inspect the burner to make sure it is not over firing.

[ ] Adjust the temperature rise to match the serial tag temperature rise.

[ ] Record the inlet gas pressure while the unit is on high fire [ ] w.c.

(NOTE: The minimum gas pressure must be at least the value listed on the unit serial tag. If this requirement is not met, the unit will not achieve the design temperature rise. Failure to meet this pressure will affect the performance warranty.)

The following items should be completed during final walk through with the customer

It is important that everyone concerned with the operation and maintenance of the equipment be trained in the safety procedures contained in the operation.

[ ] Operation of the temperature control? (Including "heat" minimum temp. rise?)

If no, explain: [ ]

[ ] Location and operation of safety disconnect switch? (use lockout/tag out procedures)

If no, explain: [ ]

[ ] Proper maintenance and replacement of filters?

If no, explain: [ ]

[ ] Location and operation of safety devices and location of reset buttons?

If no, explain: [ ]

[ ] The customer knows where to purchase replacement filters and service parts?

If no, explain: [ ]

[ ] The customer has been provided with the operator's manual and maintenance manual and has been made aware of the proper maintenance procedures.

If no, explain: [ ]

WEATHER-RITE™ IDFD-SERIES START-UP PROCEDURES (continued)

Name and position of individuals trained:

Name:	Position:

Documentation:

☐ The customer has a copy of the operations and maintenance manual?
If no, explain: _____

☐ The customer has a copy of this Start-Up checklist?
If no, explain: _____

The above start-Up checklist has been completely and accurately filled out and reviewed with the customer representative. All contracted open items requiring action and listed below, along with the party responsible for satisfaction and the anticipated da

Open Items	Responsible Party	Expected Completion Date

Customer Signature Date

Factory Representative Date

SECTION 23: THE WEATHER-RITE™ IDFD-SERIES WARRANTY

WEATHER-RITE WILL PAY FOR:

Within 24 months from date of purchase by buyer or 27 months from date of shipment by Weather-Rite (whichever occurs first), replacement parts will be provided free of charge for any part of the product which fails due to a manufacturing or material defect.

Weather-Rite will require the part in question to be returned to the factory. Weather-Rite will, at its sole discretion, repair or replace after determining the nature of the defect and disposition of part in question.

WEATHER-RITE™ Replacement Parts are warranted for the later of 12 months from date of shipment from Weather-Rite or the remaining WEATHER-RITE™ IDFD-Series warranty.

WEATHER-RITE WILL NOT PAY FOR:

Service trips, service calls and labor charges.

Shipment of replacement parts.

Claims where the total price of the goods have not been paid.

Damage due to:

- Improper installation, operation or maintenance.
- Misuse, abuse, neglect, or modification of the WEATHER-RITE™ IDFD-Series in any way.
- Use of the WEATHER-RITE™ IDFD-Series for other than its intended purpose.
- Incorrect gas or electrical supply, accident, fire, floods, acts of God, war, terrorism, or other casualty.
- Improper service, use of replacement parts or accessories not specified by Weather-Rite.
- Failure to install or maintain the WEATHER-RITE™ IDFD-Series as directed in the Installation, Operation and Service Manual.
- Relocation of the WEATHER-RITE™ IDFD-Series after initial installation.
- Use of the WEATHER-RITE™ IDFD-Series in a corrosive atmosphere containing contaminants.
- Use of the WEATHER-RITE™ IDFD-Series in the vicinity of a combustible or explosive material.
- Any defect in the WEATHER-RITE™ IDFD-Series arising from a drawing, design, or specification supplied by or on behalf of the consumer.
- Damage incurred during shipment. Claim must be filed with carrier.

WARRANTY IS VOID IF:

The WEATHER-RITE™ IDFD-Series is not installed by an contractor qualified in the installation and service of gas fired heating equipment.

You cannot prove original purchase date and required annual maintenance history.

The data plate and/or serial number are removed, defaced, modified or altered in any way.

The ownership of the WEATHER-RITE™ IDFD-Series is moved or transferred. This warranty is non-transferable.

Weather-Rite is not permitted to inspect the damaged equipment and/or component parts.

READ YOUR INSTALLATION, OPERATION AND SERVICE MANUAL.

If you have questions about your equipment, contact your installing professional. Should you need Replacement Parts or have additional questions, call or write:

Weather-Rite
1100 Seven Mile Road NW
Comstock Park, MI 49321
Telephone: +1.612.338.1401
Fax: +1.616.784.0435
www.weather-rite.com

Weather-Rite's liability, and your exclusive remedy, under this warranty or any implied warranty (including the implied warranties of merchantability and fitness for a particular purpose) is limited to providing replacement parts during the term of this warranty. Some jurisdictions do not allow limitations on how long an implied warranty lasts, so this limitation may not apply to you. There are no rights, warranties or conditions, expressed or implied, statutory or otherwise, other than those contained in this warranty.

Weather-Rite shall in no event be responsible for incidental or consequential damages or incur liability for damages in excess of the amount paid by you for the WEATHER-RITE™ IDFD-Series**.** Some jurisdictions do not allow the exclusion or limitation of incidental or consequential damages, so this limitation or exclusion may not apply to you. This warranty gives you specific legal rights, and you may also have other rights which vary from jurisdiction to jurisdiction.

Weather-Rite shall not be responsible for failure to perform under the terms of this warranty if caused by circumstances out of its control, including but not limited to war, fire, flood, strike, government or court orders, acts of God, terrorism, unavailability of supplies, parts or power. No person is authorized to assume for Weather-Rite any other warranty, obligation or liability.

LIMITATIONS ON AUTHORITY OF REPRESENTATIVES:

No representative of Weather-Rite, other than an Executive Officer, has authority to change or extend these provisions. Changes or extensions shall be binding only if confirmed in writing by Weather-Rite's duly authorized Executive Officer.

Attach this information to the wall near the WEATHER-RITE™ remote panel or equipment controls.

Weather-Rite™

Read the Installation, Operation and Service Manual thoroughly before installation, operation or service.

OPERATING INSTRUCTIONS

1. Stop! Read all safety instructions on this information sheet.
2. Open the manual gas valve in the air handler supply line.
3. Turn on electric to the air handler.
4. Set temperature selector and, if equipped, thermostat, to desired setting.
5. Set FAN switch to "ON".
6. Set BURNER switch to "ON".

TO OPERATE AS VENTILATOR

1. Stop! Read all safety instructions on this information sheet.
2. Turn on electric to the air handler.
3. Set FAN switch to "ON".

TO TURN OFF THE AIR HANDLER

1. If equipped, set the thermostat to the lowest setting.
2. Set BURNER switch to "OFF".
3. Set FAN switch to "OFF".

IF THE AIR HANDLER WILL NOT OPERATE, FOLLOW THESE INSTRUCTIONS, TO HELP ENSURE YOUR SAFETY

1. If equipped, set the thermostat to the lowest setting.
2. Set BURNER switch to "OFF".
3. Set FAN switch to "OFF".
4. Turn off electric to the air handler.
5. Close the manual gas valve in the air handler supply line.
6. Call your registered contractor qualified in the installation and service of gas-fired heating equipment.

⚠ WARNING

Fire Hazard

Keep all flammable objects, liquids and vapors the required clearances to combustibles away from equipment.

Some objects can catch fire or explode when placed close to equipment.

Failure to follow these instructions can result in death, injury or property damage.

CLEARANCES TO COMBUSTIBLES

Clearances to combustibles for Models
See Page 6 Section 3 of this manual for details.

Clearances to combustibles do not denote clearances for accessibility. Minimum clearance for access is 48" (122 cm) on all models. Minimum clearance for accessibility applies to the control enclosure, blower access panel and filter access panel (when equipped).

Weather-Rite
1100 Seven Mile Road NW
Comstock Park, MI 49321
Telephone: +1.616.784.0500
Fax: +1.616.784.0435

Installation Code and Annual Inspections: All installation and service of WEATHER-RITE™ equipment must be performed by a contractor qualified in the installation and service of equipment sold and supplied by WEATHER-RITE™ and conform to all requirements set forth in the WEATHER-RITE™ manuals and all applicable governmental authorities pertaining to the installation, service, operation and labeling of the equipment. To help facilitate optimum performance and safety, WEATHER-RITE™ recommends that a qualified contractor conduct, at a minimum, annual inspections of your WEATHER-RITE™ equipment and perform service where necessary, using only replacement parts sold and supplied by WEATHER-RITE™

Air handlers are approved for installation up to 2000' (610 m).
For installations at elevations above 2000' (610 m), consult factory.

Further Information: Applications, engineering and detailed guidance on systems design, installation and equipment performance is available through WEATHER-RITE™ representatives. Please contact us for any further information you may require, including the Installation, Operation and Service Manual.

These products are not for residential use.

© 2018 Specified Air Solutions

All rights reserved. No part of this work covered by the copyrights herein may be reproduced or copied in any form or by any means – graphic, electronic, or mechanical, including photocopying, recording, taping, or information storage and retrieval systems – without written permission of Specified Air Solutions. All information contained in this document is subject to change without notice.