Weather-Rite™

PREMIUM, INDUSTRIAL-GRADE DIRECT-FIRED, MAKE-UP AIR UNITS

DIMENSION AND SELECTION GUIDE

TT SERIES

1.616.784.0500 www.weather-rite.com

FAN SELECTION CHART

Airflow-Cubic Feet per Minute (CFM)	Model	Discharge Velocity Feet per Minute (FPM)	Required Motor Horse Power (HP) @ Noted External Static Pressure (in wc)									Brake Horse Power (HP) @ Noted External Static Pressure (in wc)									dBA Decibel @ Noted External Static Pressure (in wc)
			0	.25	.5	.75	1	1.25	1.5	1.75	2	0	.25	.50	.75	1	1.25	1.5	1.75	2	0
5,000	TT0510	1,241	2	2	2	3	3	3	3	CF	CF	1.1	1.4	1.6	1.9	2.2	2.5	2.8	CF	CF	65
6,000	TT0510	1,490	2	2	3	3	3	5	5	5	5	1.4	1.7	2.0	2.3	2.6	3.0	3.3	3.6	4.0	68
7,000	TT0510	1,738	2	3	3	3	5	5	5	5	5	1.8	2.1	2.5	2.8	3.1	3.5	3.9	4.2	4.6	71
8,000	TT0510	1,986	3	3	5	5	5	5	5	7.5	7.5	2.2	2.6	3.0	3.3	3.7	4.1	4.5	4.9	5.3	74
9,000	TT0510	2,234	3	5	5	5	5	7.5	7.5	7.5	7.5	2.7	3.1	3.5	4.0	4.4	5.1	5.3	5.7	6.1	76
10,000	TT0510	2,483	5	5	5	5	7.5	7.5	7.5	7.5	10	3.2	3.7	4.2	4.6	5.1	5.6	6.1	6.6	7.0	78
10,000	TT1025	1,226	3	3	5	CF	CF	CF	CF	CF	CF	2.1	2.6	3.2	CF	CF	CF	CF	CF	CF	71
12,500	TT1025	1,532	5	5	5	5	7.5	7.5	7.5	CF	CF	2.8	3.4	4.0	4.6	5.3	6.0	6.6	CF	CF	73
15,000	TT1025	1,838	5	5	7.5	7.5	7.5	10	10	10	15	3.7	4.4	5.0	5.7	6.4	7.2	7.9	8.7	9.5	75
15,000	TT1530	1,309	5	5	7.5	7.5	7.5	10	10	CF	CF	3.4	4.1	4.8	5.5	6.3	7.2	8.0	CF	CF	74
17,500	TT1025	2,145	7.5	7.5	7.5	10	10	10	15	15	15	4.9	5.6	6.3	7.6	7.9	8.6	9.5	10.3	11.2	78
17,500	TT1530	1,527	5	7.5	7.5	7.5	10	10	10	15	15	4.2	5.0	5.8	6.6	7.5	8.3	9.2	10.2	11.1	76
20,000	TT1025	2,451	7.5	10	10	10	15	15	15	15	15	6.3	7.1	7.9	8.7	10.1	10.4	11.3	12.2	13.1	80
20,000	TT1530	1,745	7.5	7.5	7.5	10	10	15	15	15	15	5.3	6.1	7.0	7.9	8.8	9.7	10.7	11.7	12.7	78
20,000	TT2035	1,429	5	7.5	7.5	10	10	15	15	15	15	4.7	5.6	6.5	7.5	8.5	9.5	10.6	11.7	12.8	77
22,500	TT1025	2,757	10	10	15	15	15	15	15	20	20	8.1	9.0	9.8	10.7	11.6	12.5	13.5	14.5	15.5	82
22,500	TT1530	1,964	7.5	10	10	15	15	15	15	15	20	6.6	7.5	8.4	9.4	10.3	11.4	12.4	13.4	14.5	80
22,500	TT2035	1,607	7.5	7.5	10	10	15	15	15	15	20	5.6	6.6	7.6	8.6	9.7	10.8	11.9	13.1	14.3	78
22,500	TT2545	1,319	7.5	7.5	10	10	15	15	15	20	20	5.1	6.1	7.2	8.3	9.5	10.7	12.0	14.7	16.2	71
25,000	TT1025	3,063	15	15	15	15	15	20	20	20	20	10.3	11.2	12.1	13.1	14.0	15.0	16.0	17.7	18.1	86
25,000	TT1530	2,182	10	10	15	15	15	15	20	20	20	8.2	9.1	10.1	11.1	12.1	13.2	14.3	15.4	16.5	82
25,000	TT2035	1,786	7.5	10	10	15	15	15	15	20	20	6.7	7.8	8.8	9.9	11.0	12.2	13.4	14.7	15.9	80
25,000	TT2545	1,465	7.5	10	10	15	15	15	15	20	20	5.9	7.0	8.2	9.4	10.6	11.9	13.2	14.6	15.9	73
27,500	TT1530	2,400	15	15	15	15	15	20	20	20	20	10.0	11.0	12.1	13.1	14.2	15.4	16.5	17.7	18.9	83
27,500	TT2035	1,964	10	10	15	15	15	15	20	20	20	8.1	9.1	10.3	11.4	12.6	13.9	15.1	16.4	17.7	81
27,500	TT2545	1,612	7.5	10	10	15	15	15	20	20	20	6.9	8.1	9.3	10.5	11.9	13.2	14.6	16.0	17.4	75
30,000	TT1530	2,618	15	15	20	20	20	20	25	25	25	12.6	13.7	14.8	15.5	16.6	17.8	19.1	20.3	21.6	86
30,000	TT2035	2,143	15	15	15	15	20	20	20	20	25	9.6	10.7	11.9	13.1	14.4	15.7	17.0	18.4	19.7	83
30,000	TT2545	1,758	10	10	15	15	15	20	20	20	25	8.0	9.2	10.5	11.9	13.2	14.6	16.1	17.6	19.1	77
32,500	TT2035	2,322	15	15	15	20	20	20	20	25	25	11.4	12.6	13.8	15.1	16.4	17.8	19.2	20.6	22.1	84
32,500	TT2545	1,905	10	15	15	15	20	20	20	25	25	9.3	10.6	11.9	13.3	14.8	16.2	17.7	19.3	20.9	79
35,000	TT2035	2,500	15	20	20	20	20	25	25	25	30	13.4	14.6	16.0	17.3	18.7	20.1	21.6	23.1	24.6	86
35,000	TT2545	2,051	15	15	15	20	20	20	25	25	25	10.8	12.1	13.5	15.0	16.5	18.0	19.6	21.1	22.8	81
35,000	TT3060	1,296	10	15	15	20	20	20	25	25	30	8.0	9.6	12.9	14.8	16.7	18.7	20.7	22.9	25.0	73
37,500	TT2545	2,198	15	15	20	20	20	25	25	25	30	12.4	13.8	15.2	16.8	18.3	20.0	21.6	23.3	25.0	82
37,500	TT3060	1,388	10	15	15	15	20	20	25	25	25	8.9	10.6	12.3	14.1	15.9	17.8	19.8	21.8	23.9	75
40,000	TT2545	2,344	20	20	20	25	25	25	30	30	30	14.2	15.7	17.2	18.8	20.4	22.1	23.8	25.5	27.3	84
40,000	TT3060	1,481	15	15	15	20	20	25	25	25	30	9.8	11.6	13.4	15.2	17.1	19.1	21.1	23.2	25.3	76
40,000	TT3580	1,266	15	15	20	20	25	25	30	30	40	10.5	12.5	14.6	16.7	19.0	21.3	23.8	26.3	29.0	72
45,000	TT2545	2,637	20	25	25	30	30	30	40	40	40	18.5	20.1	21.8	23.5	25.2	27.0	28.8	30.7	32.6	87
45,000	TT3060	1,667	15	15	20	20	25	25	30	30	40	12.0	13.9	15.8	17.8	19.8	21.9	24.1	26.4	28.6	79
45,000	TT3580	1,424	15	15	20	20	25	25	30	30	30	10.6	12.6	14.7	16.9	19.1	21.4	23.8	26.2	26.7	74
50,000	TT3060	1,852	20	20	20	25	25	30	30	40	40	14.6	16.6	18.7	20.8	23.0	25.2	27.4	29.8	32.3	81
50,000	TT3580	1,582	15	20	20	25	25	30	30	40	40	12.5	14.7	16.9	19.2	21.6	24.0	26.5	32.9	35.7	77
50,000	TT4095	1,455	15	15	20	25	30	30	40	40	40	11.3	13.6	16.0	18.5	23.8	26.7	29.7	32.7	36.0	73

Class II Wheels CF = Contact Factory See Page 3 and 4 for Important Notes.

FAN SELECTION CHART

Airflow-Cubic Feet per Minute (CFM)	Model	Discharge Velocity Feet per Minute (FPM)	Required Motor Horse Power (HP) @ Noted External Static Pressure (in wc)									Brake Horse Power (HP) @ Noted External Static Pressure (in wc)									dBA Decibel @ Noted External Static Pressure (in wc)
			0	.25	.5	.75	1	1.25	1.5	1.75	2	0	.25	.50	.75	1	1.25	1.5	1.75	2	0
55,000	TT3060	2,037	20	25	25	25	30	30	40	40	40	18.1	20.0	21.9	23.9	26.0	28.1	30.1	32.3	34.6	83
55,000	TT3580	1,741	20	20	20	25	25	30	30	40	40	15.0	17.1	19.2	21.2	23.5	25.7	28.1	30.4	32.8	80
55,000	TT4095	1,600	20	20	25	25	30	30	30	CF	CF	16.1	18.4	20.8	23.2	25.6	28.2	30.8	CF	CF	75
60,000	TT3060	2,222	25	25	30	30	40	40	40	40	40	22.0	24.1	26.2	28.3	30.5	32.7	35.0	37.3	39.5	85
60,000	TT3580	1,899	20	25	25	25	30	30	40	40	40	18.1	20.2	22.4	24.7	27.0	29.4	31.8	34.3	36.9	81
60,000	TT4095	1,745	20	25	25	30	30	40	40	40	40	18.6	21.0	23.5	26.1	28.6	31.3	34.1	36.9	39.7	77
65,000	TT3580	2,057	25	25	30	30	40	40	40	40	50	21.6	23.9	26.2	28.6	31.1	33.6	36.1	38.8	41.4	83
65,000	TT4095	1,891	25	25	30	30	40	40	40	50	50	21.3	23.8	26.5	29.2	31.9	34.7	37.6	40.5	43.5	79
70,000	TT3580	2,215	30	30	40	40	40	40	50	50	50	25.5	27.9	30.4	33.0	35.6	38.2	40.9	43.5	46.4	85
70,000	TT4095	2,036	25	30	30	40	40	40	50	50	50	24.5	27.1	29.8	32.7	35.6	38.5	41.5	44.5	47.6	81
75,000	TT3580	2,374	30	40	40	40	50	50	50	50	60	30.0	32.6	35.2	37.9	40.6	43.4	46.2	49.1	52.0	87
75,000	TT4095	2,182	30	40	40	40	40	50	50	50	60	27.9	30.7	33.6	36.4	39.5	42.6	45.7	48.9	52.1	83
75,000	TT5515	1,552	25	25	30	40	40	CF	CF	CF	CF	21.3	24.5	27.9	31.3	34.8	CF	CF	CF	CF	73
80,000	TT3580	2,532	40	40	50	50	50	50	60	60	60	35.1	37.8	40.6	43.4	46.3	49.2	52.1	55.1	58.2	88
80,000	TT4095	2,327	40	40	40	50	50	50	60	60	60	31.7	34.6	37.6	40.7	43.7	47.0	50.3	53.6	56.9	85
80,000	TT5515	1,655	25	30	40	40	40	50	CF	CF	CF	23.5	26.9	30.3	33.9	37.6	41.3	CF	CF	CF	75
85,000	TT4095	2,473	40	40	50	50	50	60	60	60	75	36.0	39.1	42.3	45.5	48.7	51.9	55.4	58.8	62.4	86
85,000	TT5515	1,759	30	30	40	40	50	50	50	60	CF	25.8	29.4	33.0	36.6	40.4	44.3	48.3	52.3	CF	76
90,000	TT4095	2,618	50	50	50	60	60	60	75	75	75	40.7	43.9	47.2	50.5	53.9	57.4	60.7	64.3	68.0	87
90,000	TT5515	1,862	30	40	40	40	50	50	60	60	60	28.3	32.0	35.8	39.6	43.5	47.5	51.6	55.8	60.0	78
95,000	TT4095	2,764	50	50	60	60	60	75	75	75	75	45.9	49.2	52.6	56.1	59.6	63.2	66.8	70.5	74.1	88
95,000	TT5515	1,966	40	40	40	50	50	60	60	60	75	31.3	35.0	38.9	42.9	46.9	51.0	55.3	59.5	64.0	79
100,000	TT5515	2,069	40	40	50	50	60	60	60	75	75	34.3	38.1	42.2	46.2	50.5	54.7	59.0	66.2	68.0	80
110,000	TT5515	2,276	50	50	50	60	60	75	75	75	100	41.1	45.2	49.5	53.8	58.3	62.8	67.5	72.2	76.9	83
120,000	TT5515	2,483	50	60	60	75	75	75	100	100	100	49.0	53.4	57.9	62.5	67.1	71.9	76.8	81.9	86.9	85
130,000	TT5515	2,690	60	75	75	75	100	100	100	100	100	58.0	62.7	67.5	72.4	77.4	82.2	87.4	92.7	98.0	87
140,000	TT5515*	2,897	75	75	100	100	100	100	100	125	125	64.8	70.3	75.9	81.6	87.4	93.4	99.4	105.6	111.9	90
150,000	TT5515*	3,103	100	100	100	100	125	125	125	125	125	80.0	85.3	90.6	96.0	101.5	107.1	112.8	118.5	124.4	91

*Denotes MUA configuration only Class II Wheels CF = Contact Factory See Page 3 and 4 for Important Notes.

IMPORTANT NOTES:

Sound levels are in dBA at 5' from the discharge opening. This figure does not account for attenuation, additional noise or directivity factors. Motor horsepower required includes both the running HP and the starting torque requirements. HP can be greater than the standard fan curve charts. Brake HP does not include drive losses. For external static pressure greater than 2", contact your local representative or Weather-Rite. For operation in altitudes exceeding 2000' above sea level, contact the factory. The recommended motor horsepowers shown for the Fan Selection Chart include fan and burner static pressure only (internal equipment static pressure). Other cabinet options could add static pressure and should be included in the external static pressure used to select motor horsepower. See the Static Pressure Drops on page 4 for the external static pressures that should be added for selected options.

BURNER SELECTION CHART

Airflow - Cubic Feet per Minute (CFM)	Burner Capacity Chart								
	Gas Flow - Cubic Feet per Hour (CFH) for Stated Temperature Rise								
	40 °F	50 °F	60 °F	70 °F	80 °F	90 °F	100 °F	110 °F	120 °F
5,000	375	375	375	375	750	750	750	750	750
6,000	375	375	750	750	750	750	750	750	1,125
7,000	375	375	750	750	750	750	750	1,125	1,125
8,000	375	750	750	750	750	1,125	1,125	1,125	1,125
9,000	750	750	750	750	750	1,125	1,125	1,125	1,500
10,000	750	750	750	750	1,125	1,125	1,125	1,500	1,500
12,500	750	750	1,125	1,125	1,125	1,500	1,500	1,500	1,875
15,000	750	1,125	1,125	1,125	1,500	1,500	1,875	1,875	2,250
17,500	750	1,125	1,125	1,500	1,500	1,875	1,875	2,250	2,250
20,000	1,125	1,125	1,500	1,500	1,875	2,250	2,250	2,625	2,625
22,500	1,125	1,500	1,500	1,875	2,250	2,250	2,625	2,625	3,000
25,000	1,125	1,500	1,875	1,875	2,250	2,625	2,625	3,000	3,375
30,000	1,500	1,875	2,250	2,250	2,625	3,000	3,375	3,750	4,125
35,000	1,500	1,875	2,250	2,625	3,000	3,375	3,750	4,125	4,500
40,000	1,875	2,250	2,625	3,000	3,375	4,125	4,500	4,875	5,250
45,000	2,250	2,625	3,000	3,375	4,125	4,500	4,875	5,250	6,000
50,000	2,250	2,625	3,375	3,750	4,500	4,875	5,250	6,000	6,375
55,000	2,625	3,000	3,750	4,125	4,875	5,250	6,000	6,375	7,125
60,000	2,625	3,375	4,125	4,500	5,250	6,000	6,375	7,125	7,875
65,000	3,000	3,750	4,125	4,875	5,625	6,375	7,125	7,500	8,625
70,000	3,000	3,750	4,500	5,250	6,000	6,750	7,500	8,250	9,000
75,000	3,375	4,125	4,875	5,625	6,375	7,125	7,875	9,000	9,750
80,000	3,375	4,500	5,250	6,000	6,750	7,875	8,625	9,375	10,500
85,000	3,750	4,500	5,625	6,375	7,500	8,250	9,000	10,125	10,875
90,000	4,125	4,875	6,000	6,750	7,875	8,625	9,750	10,875	11,625
95,000	4,125	5,250	6,000	7,125	8,250	9,375	10,125	11,250	12,375
100,000	4,500	5,250	6,375	7,500	8,625	9,750	10,875	12,000	13,125
110,000	4,875	6,000	7,125	8,250	9,375	10,500	12,000	13,125	14,250
120,000	5,250	6,375	7,875	9,000	10,500	11,625	13,125	14,250	15,375
130,000	5,625	7,125	8,250	9,750	11,250	12,750	13,875	15,375	16,875
150,000	6,375	7,875	9,750	11,250	12,750	14,625	16,125	17,625	19,500

120 °F temperature rise is not ETL listed.

Greater than 100 °F temperature rise is not ETL listed when LPG is the fuel.

STATIC PRESSURE DROPS FOR OPTIONS

Description	in wc	Description	in wc
Moisture Limiter For Horizontal Inlet Hood	0.10	Damper - Inlet	0.05
Aluminum Mesh Filters For Horizontal Inlet Hood	0.15	Damper - Low Leak	0.05
Upright Stand with Polyester Filters (FR)	0.25	Damper - Discharge	0.10
Outside Air Filter Section, No Filters	0	Damper - Discharge, Low Leak	0.10
Filtered Mixing Box, No Filters	0	End Discharge	0.20
Filters - Polyester	0.25	Discharge Plate	0.05
Filters - Aluminum Mesh	0.15	Discharge Head - One Way	0.10
Filters - 30% Pleated	0.25	Discharge Head - Three Way	0.10
Custom Filter Options (Bag, Cartridge, HEPA)	CF	Discharge Head - Four Way	0.05
Evaporative Cooling Section (ECM)	0.25	Horizontal Inlet Hood	0.00
Evaporative Cooling Section (ECM-D)	0.50	Horizontal Inlet Plenum	0.10
Cooling Coil Section	0.10	Upright Inlet Plenum Base	0.05
Cooling Coil	CF	Energy Recovery	See Pg. 10

IMPORTANT NOTES:

Calculate the static pressure for selected cabinet options plus any ductwork. Use external static pressure column found in Fan Selection Chart on pages 2-3 to determine motor horsepower.

MANIFOLD SELECTION CHARTS

DIRECTIONS:

- Select a point on the chart that represents the intersection of the inlet gas pressure and the unit cubic feet per hour (CFH).
- Select the manifold size to the right of this point.
- For inlet supply gas pressure exceeding 5 PSI, an additional gas regulator is required.

Natural Gas Flow vs. Required Inlet Pressure using an HMA-2 burner

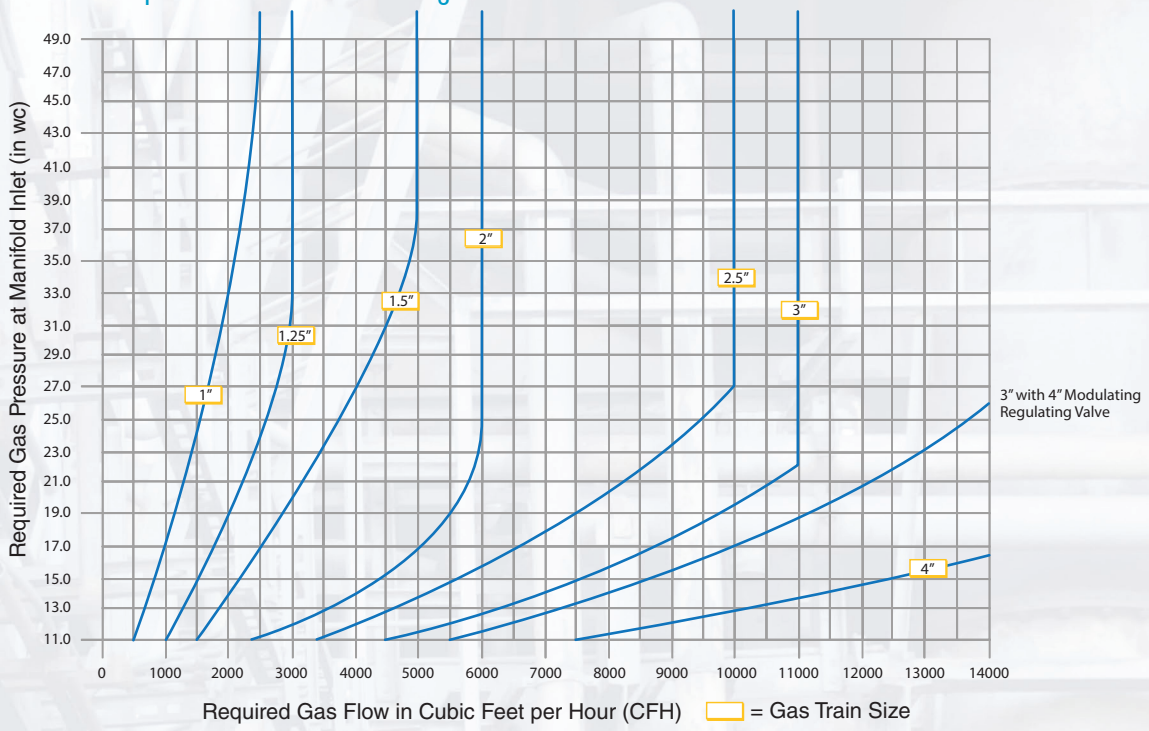

Natural Gas Flow vs. Required Inlet Pressure using an HMA-2A burner

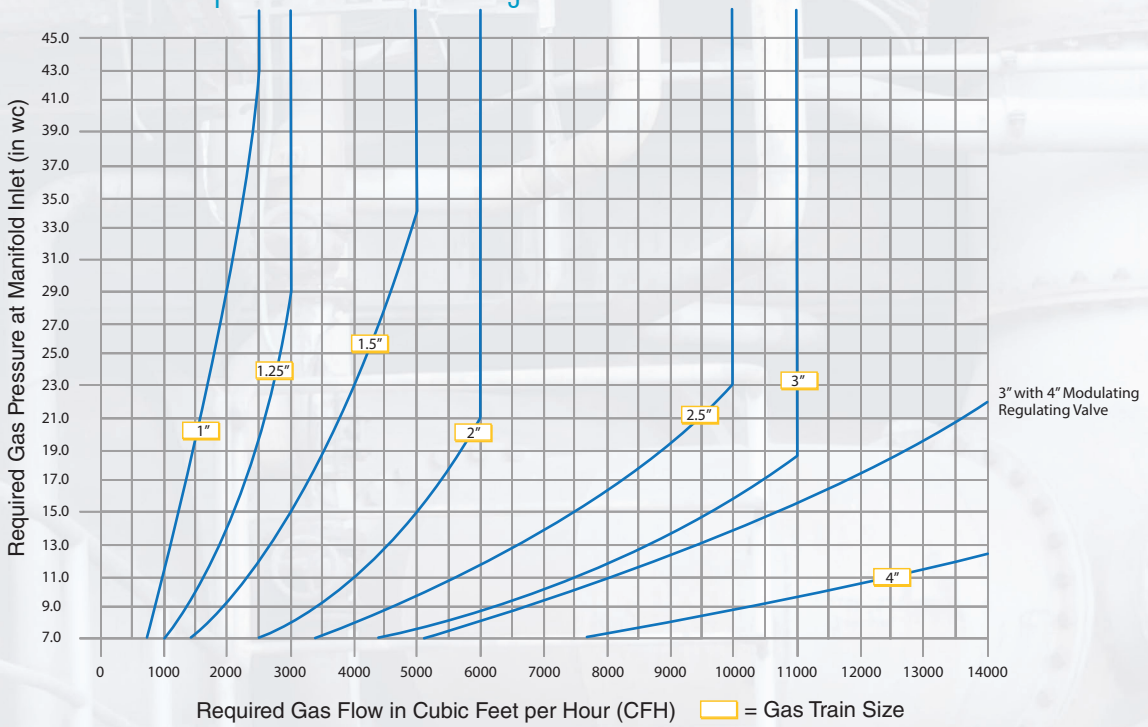

TT AM HORIZONTAL MODEL

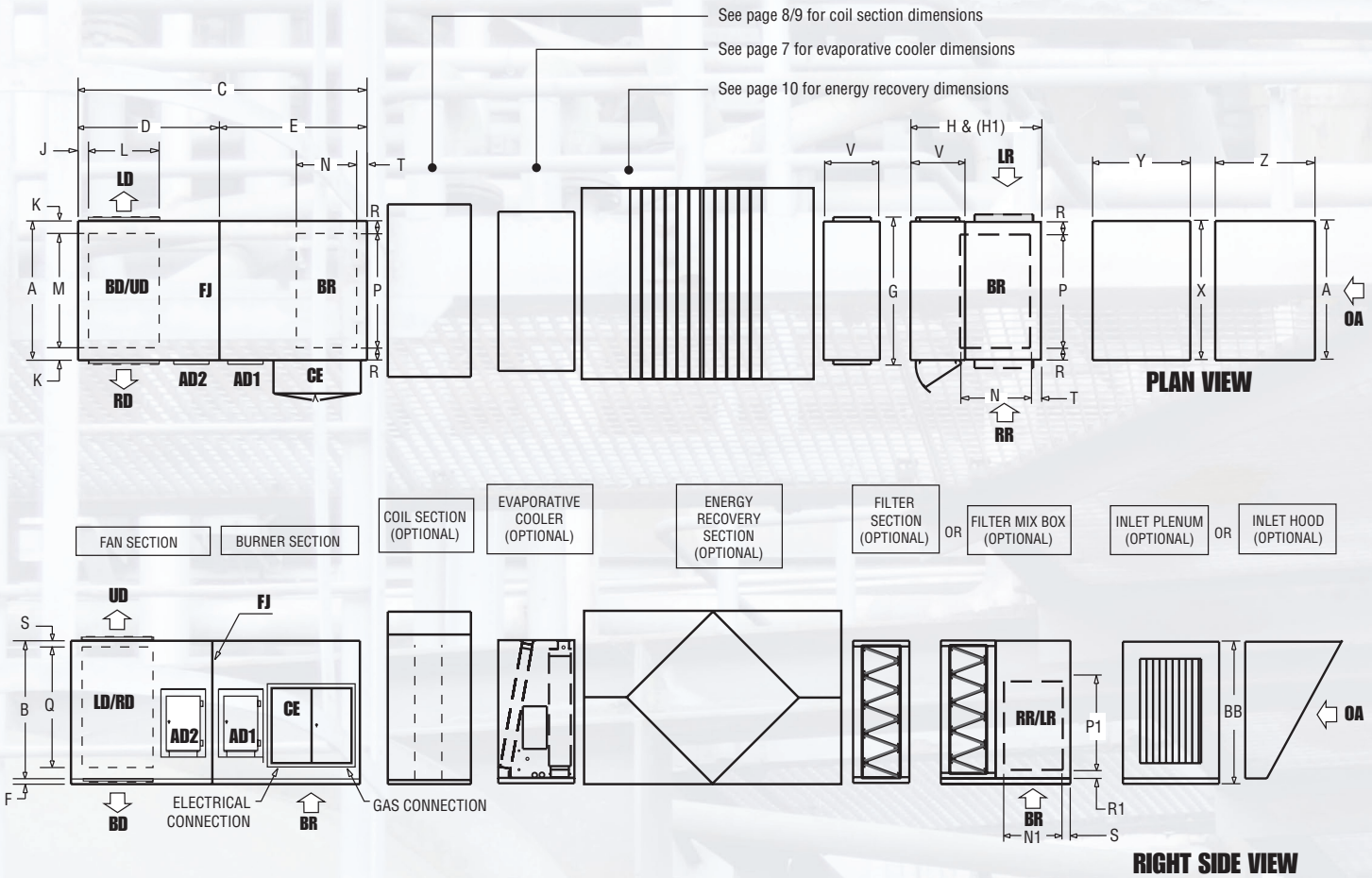

Dimensions

Model	Air Handler Width	Air Handler Height	Air Handler Length			Base Frame Formed Channel	Base Frame Structural Angle	Filter Section Width	Filter Mixbox Length	Filter Mixbox Length With Side Return		Discharge Length	Discharge Width	Return Air Length	Return Air Length	Return Air Width	Return Air Height	Discharge Height					Filter Section Length	Plenum Width	Plenum Length	Inlet Hood Length	Minimum Leg Height	Plenum Height
	A	B	C	D	E	F		G	H	H1	J	K	L	M	N	N1	P	P1	Q	R	R1	S	T	V	X	Y	Z	AA	BB
TT0510	40	40	109	-		4	-	62	62	62	4	5.5	20	29	18	27	32	22	34	4	2	3	10	30	40	60	48	36	40
TT1025	58	58	120	-		4	-	62	66	77	5	5.5	25	47	26	41	50	32	50	4	2	3	4	30	63	77	72	36	63
TT1530	63	63	130	-		4	-	81	68	77	6	6.5	33	50	30	41	55	40	53	4	2	3	4	30	63	77	84	36	63
TT2035	69	69	137	-		4	-	81	70	79	6	6.5	36	56	32	43	61	46	59	4	2	3	4	30	76	84	84	36	76
TT2545	76	76	140	-		4	-	81	72	80	6	6.5	39	63	34	44	68	53	66	4	2	3	4	30	76	84	84	36	76
TT3060	94	94	154	90	64	6	-	100	77	85	6	6.5	48	81	38	50	86	65	84	4	2	3	4	30	94	77	96	48	94
TT3580	104	96	158	94	64	6	-	119	84	100	6	6.5	50	91	45	65	96	67	90	4	2	3	4	30	112	120	96	48	96
TT4095	112	96	163	94	69	-	3	119	84	107	6	6.5	50	99	44	72	104	64	90	4	2	3	4	30	112	120	96	48	96
TT5515	131	112	177	81	96	-	4	139	94	112	6	7.5	60	116	48	77	123	76	106	4	2	3	4	30	131	138	96	48	112

TT AM UPRIGHT MODEL

LEGEND

- **OA** = Outside Air
- **CE** = Control Enclosure
- **BD** = Bottom Discharge
- **LD** = Left Discharge
- **RD** = Right Discharge
- **UD** = Up Discharge
- **BR** = Bottom Return
- **RR** = Right Return
- **LR** = Left Return
- **FJ** = Field Joint (Models TT3050 - TT5515)
- **AD1** = Access Door (Models TT5510 & TT5515)
- **AD2** = Access Door (Models TT0510 - TT4095)

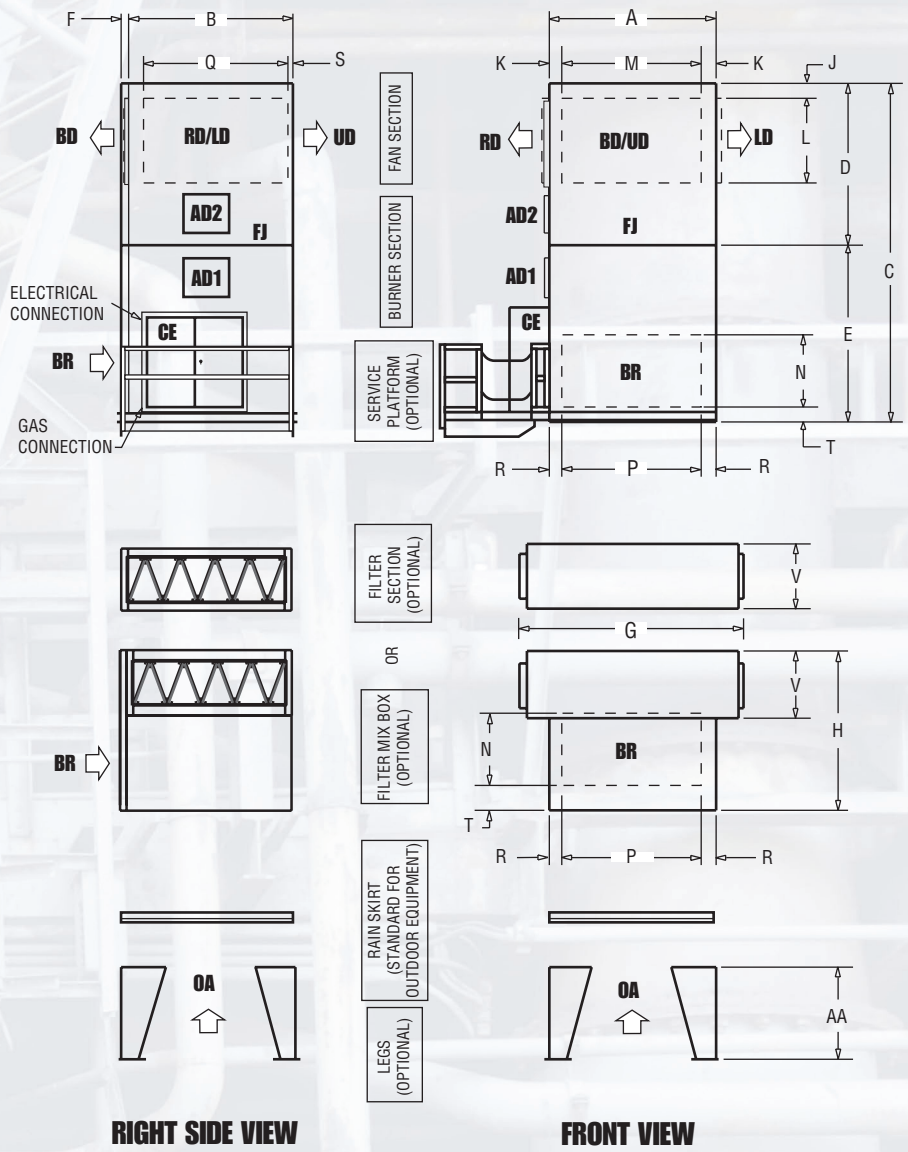

IMPORTANT NOTES:

- All dimensions are in inches.
- All weights are in pounds.
- All dimensions and weights are subject to change without notice.
- Dimensions apply to both horizontal and upright units.
- Filters are shipped loose.
- Legs are shipped loose.
- Control enclosure for 3" or smaller manifolds is 57" H x 57" W x 25" D. (B dimension of Model TT0510 cabinet size is approximately 20" smaller than the control enclosure. Model TT2545 control enclosure is 57" H x 57" W x 20" D.)
- To minimize the potential for water entrainment, an inlet hood with moisture limiter or inlet plenum may be desirable.
- Outdoor air duct size varies. Consult Weather-Rite.
- Control enclosure can be located on left or right side of unit. (Shown on right side in drawings)

Model	Estimated Shipping Weights											
	Horizontal Fan Section	Horizontal Burner Section	Horizontal Service Platforms			Filter Section	Filter Mixbox	Inlet Hood	Inlet Plenum	Upright Service Platform	Upright Fan Section	Upright Burner Section
			Basic	With OA* Add	With FMB** Add							
TT0510	1,254		475	70	190	320	611	80	343	340	1,289	
TT1025	2,110		520	70	205	465	843	135	657	430	2,129	
TT1530	2,427		606	69	209	525	1,012	210	661	470	2,443	
TT2035	2,783		630	70	215	600	1,122	226	866	500	2,816	
TT2545	3,114		650	68	230	640	1,230	248	870	525	3,150	
TT3060	2,673	1,936	710	70	240	760	1,707	395	1,157	600	2,663	2.029
TT3580	2,961	2,126	735	65	275	875	2,084	410	1,635	620	3,129	2,228
TT4095	4,219	2,332	760	65	275	1,125	2,220	425	2,052	630	4,553	2,541
TT5515	4,101	4,849	820	70	310	1,400	2,776	590	2,128	720	4,503	4,983

* Outside Air ** Filter Mix Box

TT MUA HORIZONTAL MODEL

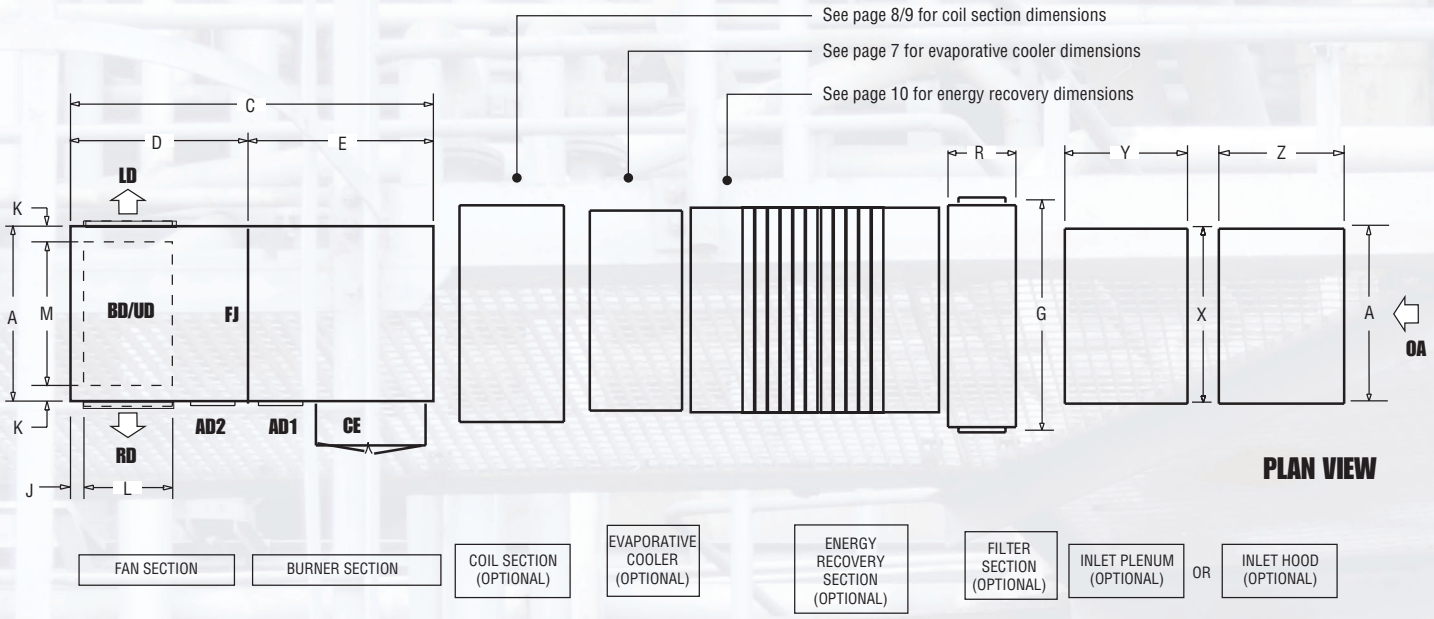

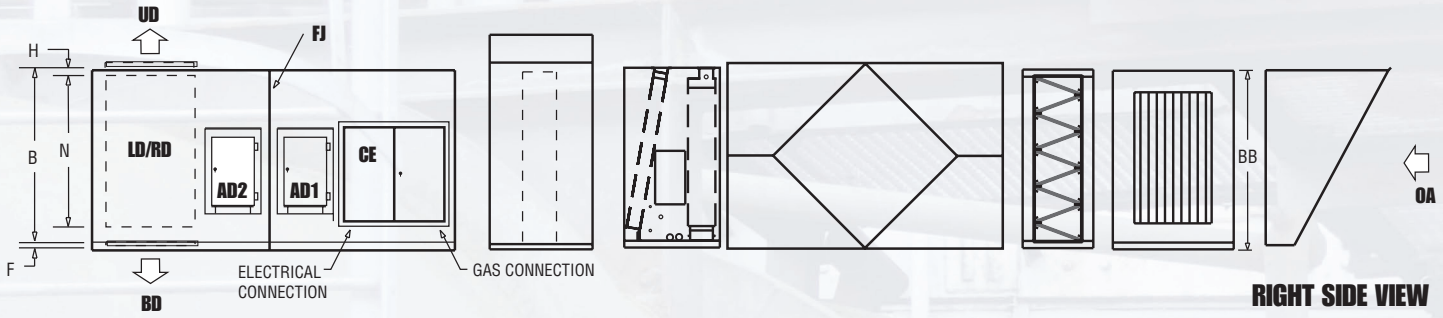

Dimensions

Model	Air Handler Width	Air Handler Height	Air Handler Length			Base Frame Formed Channel	Base Frame Structural Angle	Filter Section Width				Discharge Length	Discharge Width	Discharge Height	Minimum Leg Height	Filter Section Length	Plenum Width	Plenum Length	Inlet Hood Length	Plenum Height
	A	B	C	D	E	F		G	H	J	K	L	M	N	P	R	X	Y	Z	BB
TT0510	40	40	109	-		4	-	62	3	4	5.5	20	29	34	36	30	52	60	48	40
TT1025	58	58	120	-		4	-	62	3	5	5.5	25	47	50	36	30	63	77	72	63
TT1530	63	63	130	-		4	-	81	3	6	6.5	33	50	53	36	30	76	84	84	63
TT2035	69	69	137	-		4	-	81	3	6	6.5	36	56	59	36	30	76	84	84	76
TT2545	76	76	140	-		4	-	81	3	6	6.5	39	63	66	36	30	94	77	84	76
TT3060	94	94	154	90	64	6	-	100	3	6	6.5	48	81	84	48	30	112	120	96	94
TT3580	104	96	158	94	64	6	-	119	3	6	6.5	50	91	90	48	30	112	120	96	96
TT4095	112	96	163	94	69	-	3	119	3	6	6.5	50	99	90	48	30	131	138	96	96
TT5515	131	112	168	81	87	-	4	139	3	6	7.5	60	116	106	48	30	131	138	96	112

Estimated Shipping Weights

Model	Horizontal Fan Section	Horizontal Burner Section	Filter Section	Inlet Hood	Inlet Plenum
TT0510	1,325		320	80	452
TT1025	2,110		465	135	657
TT1530	2,530		525	210	862
TT2035	2,783		600	226	866
TT2545	3,305		640	248	1,126
TT3060	2,808	1,973	760	395	1,627
TT3580	3,036	2,159	875	410	1,635
TT4095	4,525	2,361	1,125	425	2,052
TT5515	4,101	5,210	1,400	590	2,128

TT MUA UPRIGHT MODEL

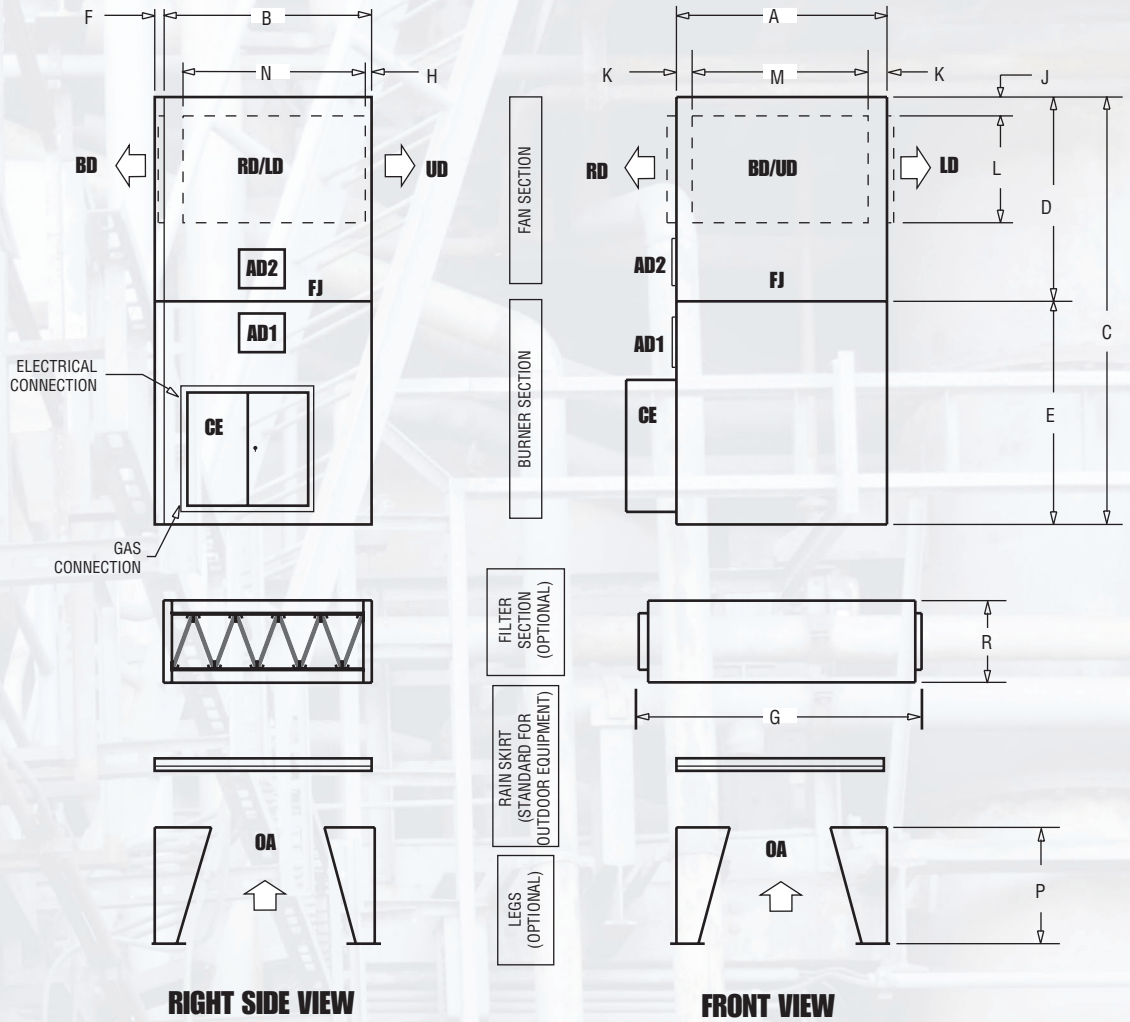

LEGEND

- **OA** = *Outside Air*
- **CE** = *Control Enclosure*
- **BD** = *Bottom Discharge*
- **LD** = *Left Discharge*
- **RD** = *Right Discharge*
- **UD** = *Up Discharge*
- **BR** = *Bottom Return*
- **RR** = *Right Return*
- **LR** = *Left Return*
- **FJ** = *Field Joint (Models TT3060 - TT5515)*
- **AD1** = *Access Door (Model TT5515)*
- **AD2** = *Access Door (Models TT0510 - TT4095)*

IMPORTANT NOTES:

- All dimensions are in inches.
- All weights are in pounds.
- All dimensions and weights are subject to change without notice.
- Dimensions apply to both horizontal and upright units.
- Filters are shipped loose.
- Legs are shipped loose.
- Control enclosure for 3" or smaller manifolds is 57" H x 57" W x 25" D. (B dimension of Model TT0510 cabinet size is approximately 20" smaller than the control enclosure. Model TT2545 control enclosure is 57" H x 57" W x 20" D.)
- To minimize the potential for water entrainment, an inlet hood with moisture limiter or inlet plenum may be desirable.
- Outdoor air duct size varies. Consult Weather-Rite.
- Control enclosure can be located on left or right side of unit. (Shown on right side in drawings)

Model	Estimated Shipping Weights	
	Upright Fan Section	Upright Burner Section
TT0510	1,360	
TT1025	2,129	
TT1530	2,546	
TT2035	2,816	
TT2545	3,341	
TT3060	2,798	2,076
TT3580	3,204	2,234
TT4095	4,859	2,441
TT5515	4,503	5,044

TT FR HORIZONTAL MODEL

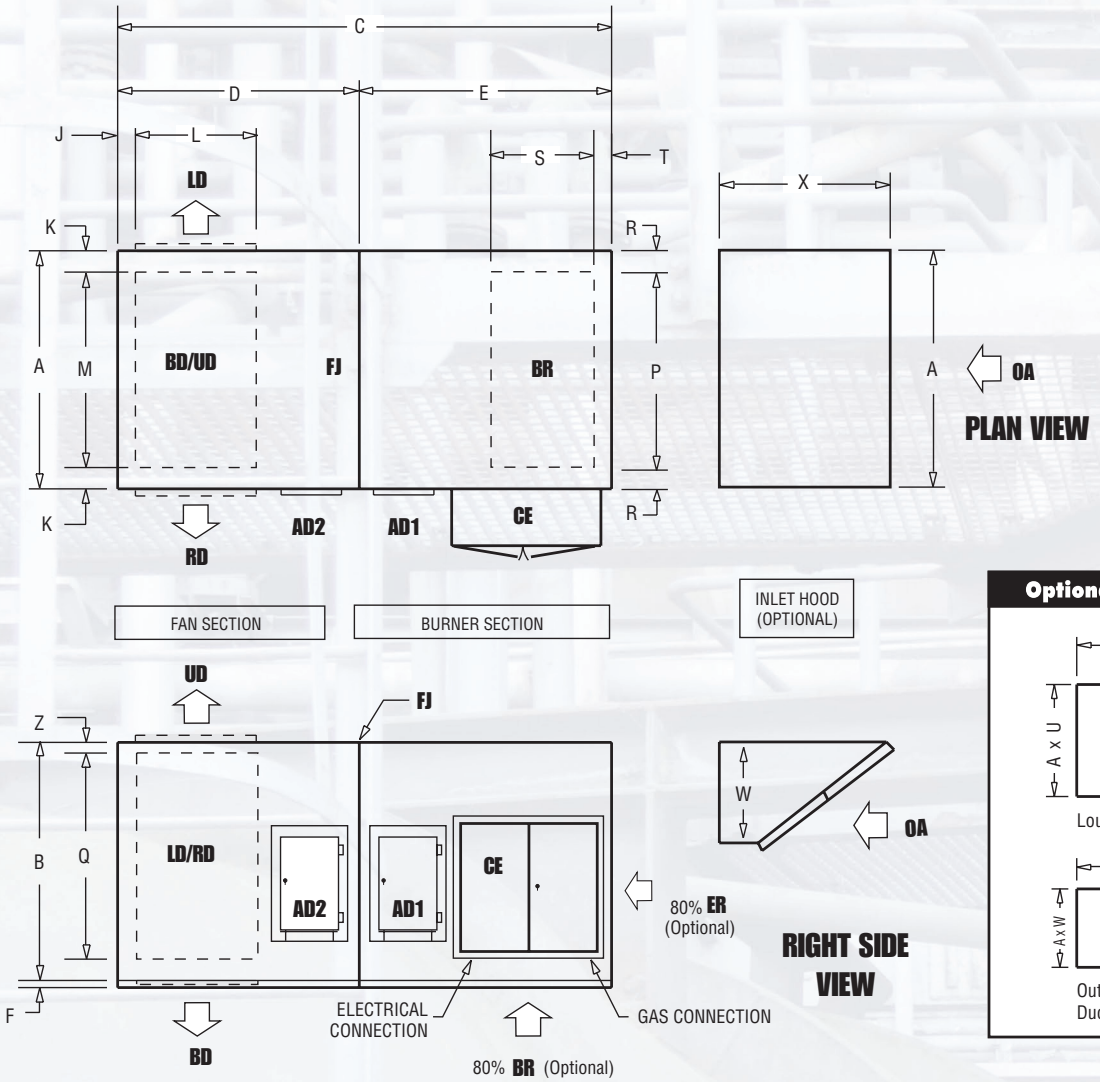

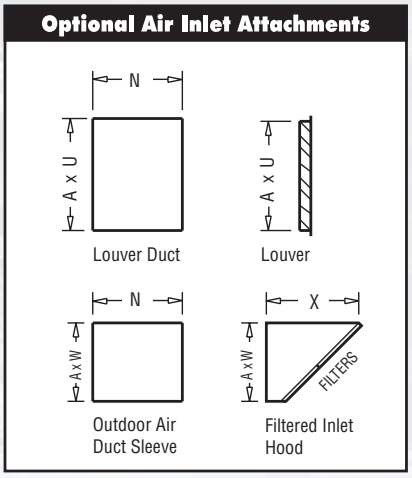

Dimensions

Model	Air Handler Width	Air Handler Height	Air Handler Length			Base Frame Formed Channel	Base Frame Structural Angle	Outside Air Length	Filter Stand Height			Discharge Length	Discharge Width	Discharge Length	Return Air Width	Discharge Height		Return Air Length		Louver Height	Inlet Hood / Duct Height	Inlet Hood Length	Minimum Leg Height	
	A	B	C	D	E	F		G	H	J	K	L	M	N	P	Q	R	S	T	U	W	X	Y	Z
TT0510	40	40	109	-		4	-	10	24	4	5.5	20	29	30	32	34	4	18	10	28	21	27	36	3
TT1025	58	58	120	-		4	-	12	36	5	5.5	25	47	30	50	50	4	26	4	34	30	35	36	3
TT1530	63	63	130	-		4	-	12	36	6	6.5	33	50	30	55	53	4	30	4	34	32.5	37	36	3
TT2035	69	69	137	-		4	-	16	36	6	6.5	36	56	30	61	59	4	32	4	45	35.5	39	36	3
TT2545	76	76	140	-		4	-	16	36	6	6.5	39	63	30	68	66	4	34	4	45	39	42	36	3
TT3060	94	94	154	90	64	6	-	20	36	6	6.5	48	81	30	86	84	4	38	4	56	48	50	48	3
TT3580	104	96	158	94	64	6	-	20	48	6	6.5	50	91	30	96	90	4	45	4	56	49	51	48	3
TT4095	112	96	163	94	69	-	3	24	60	6	6.5	50	99	30	104	90	4	44	4	68	49	51	48	3
TT5515	131	112	177	81	96	-	4	24	60	6	7.5	60	116	30	123	106	4	48	4	68	57	57	48	3

Estimated Shipping Weights

Model	Horizontal Fan Section	Horizontal Burner Section	Filter Section	Inlet Hood
TT0510	1,245		320	80
TT1025	2,055		465	135
TT1530	2,354		525	210
TT2035	2,716		600	226
TT2545	3,034		640	248
TT3060	2,673	1,712	760	395
TT3580	2,961	1,847	875	410
TT4095	4,219	1,994	1,125	425
TT5515	4,101	4,418	1,400	590

TT FR UPRIGHT MODEL

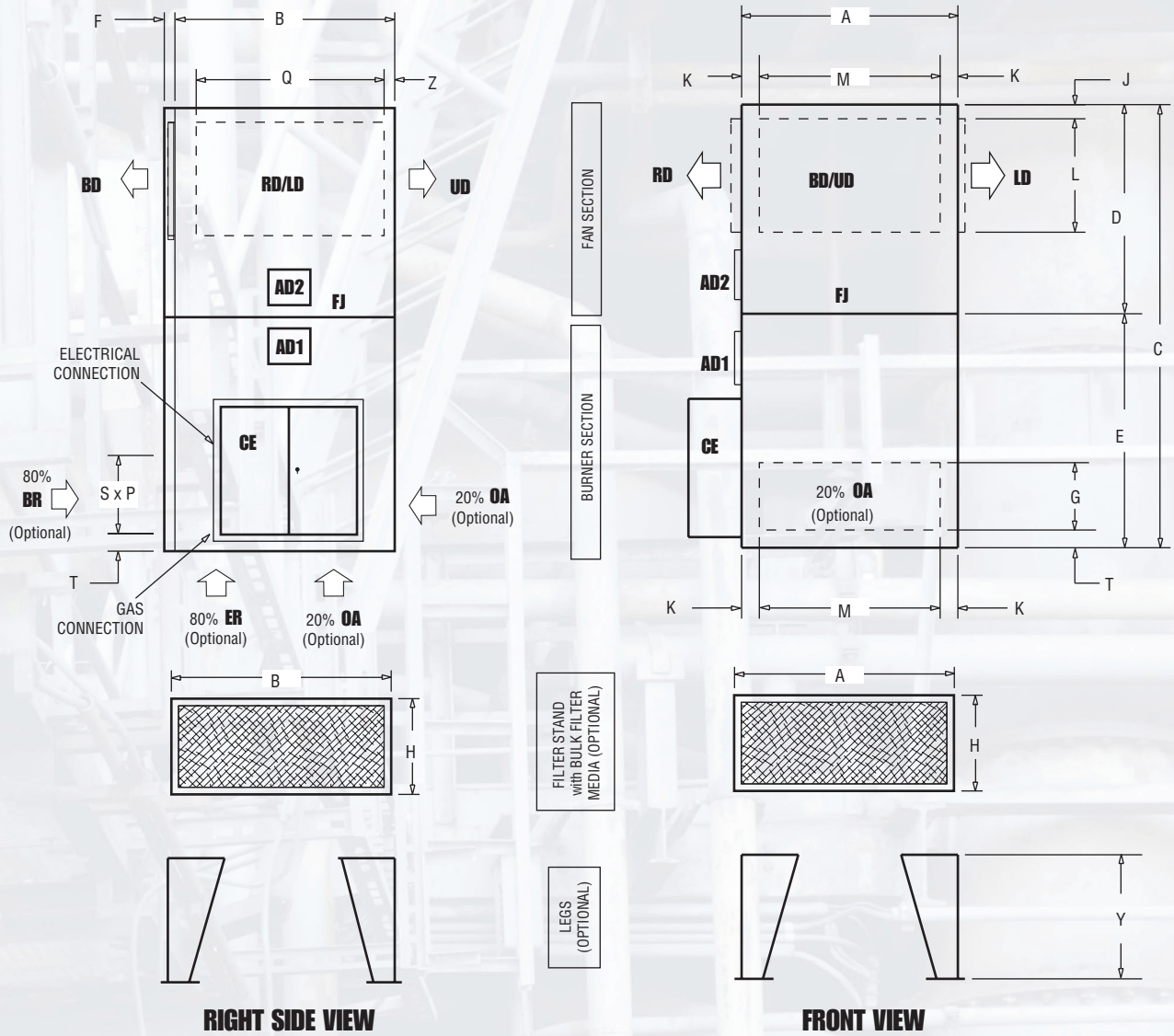

RIGHT SIDE VIEW

FRONT VIEW

LEGEND

- ***OA** = Outside Air*
- ***CE** = Control Enclosure*
- ***BD** = Bottom Discharge*
- ***LD** = Left Discharge*
- ***RD** = Right Discharge*
- ***UD** = Up Discharge*
- ***BR** = Bottom Return*
- ***RR** = Right Return*
- ***LR** = Left Return*
- ***FJ** = Field Joint (Models TT3060 - TT5515)*
- ***AD1** = Access Door (Model TT5515)*
- ***AD2** = Access Door (Models TT0510 - TT4095)*

IMPORTANT NOTES:

- All dimensions are in inches.
- All weights are in pounds.
- All dimensions and weights are subject to change without notice.
- Dimensions apply to both horizontal and upright units.
- Filters are shipped loose.
- Legs are shipped loose.
- Control enclosure for 3" or smaller manifolds is 57" H x 57" W x 25" D. (B dimension of Model TT0510 cabinet size is approximately 20" smaller than the control enclosure. Model TT2545 control enclosure is 57" H x 57" W x 20" D.)
- To minimize the potential for water entrainment, an inlet hood with moisture limiter or inlet plenum may be desirable.
- Outdoor air duct size varies. Consult Weather-Rite.
- Control enclosure can be located on left or right side of unit. (Shown on right side in drawings)

Model	Estimated Shipping Weights		
	Upright Fan Section	Upright Burner Section	Filter Stand
TT0510	1,230		95
TT1025	2,054		140
TT1530	2,360		150
TT2035	2,704		160
TT2545	3,017		175
TT3060	2,663	1,805	350
TT3580	3,129	1,949	400
TT4095	4,553	2,203	450
TT5515	4,503	4,552	500

TT VAV HORIZONTAL MODEL

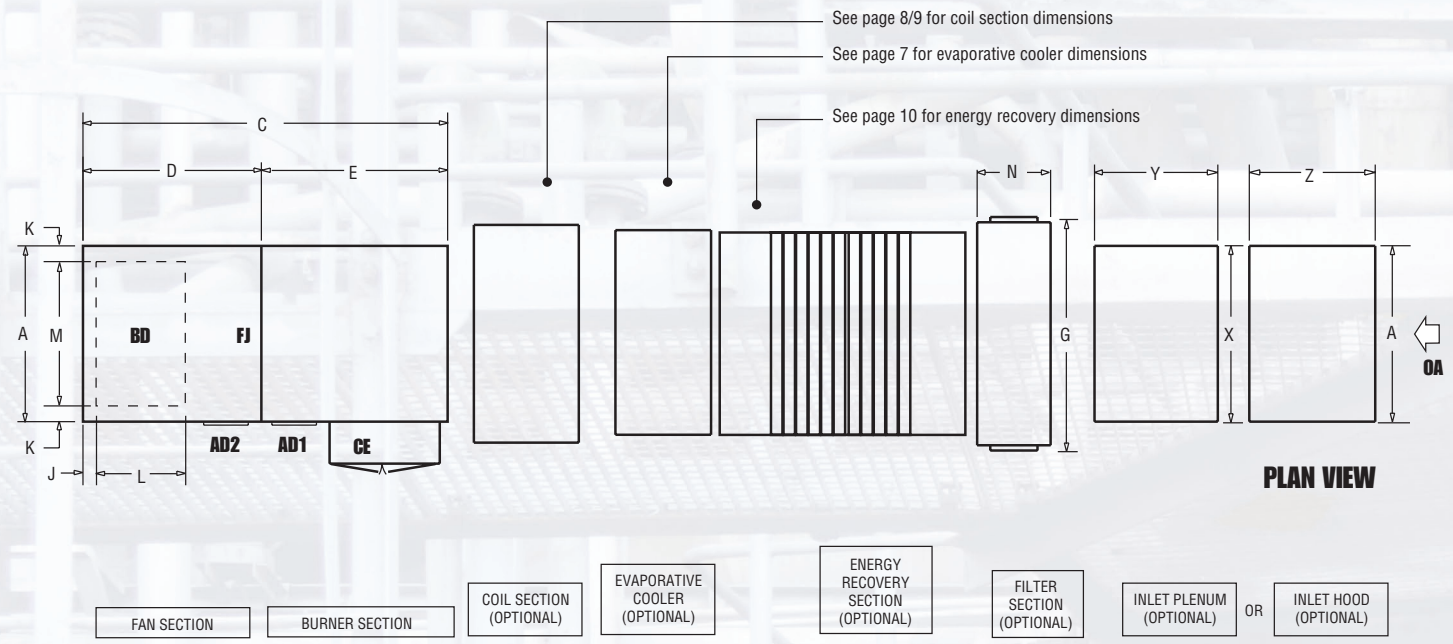

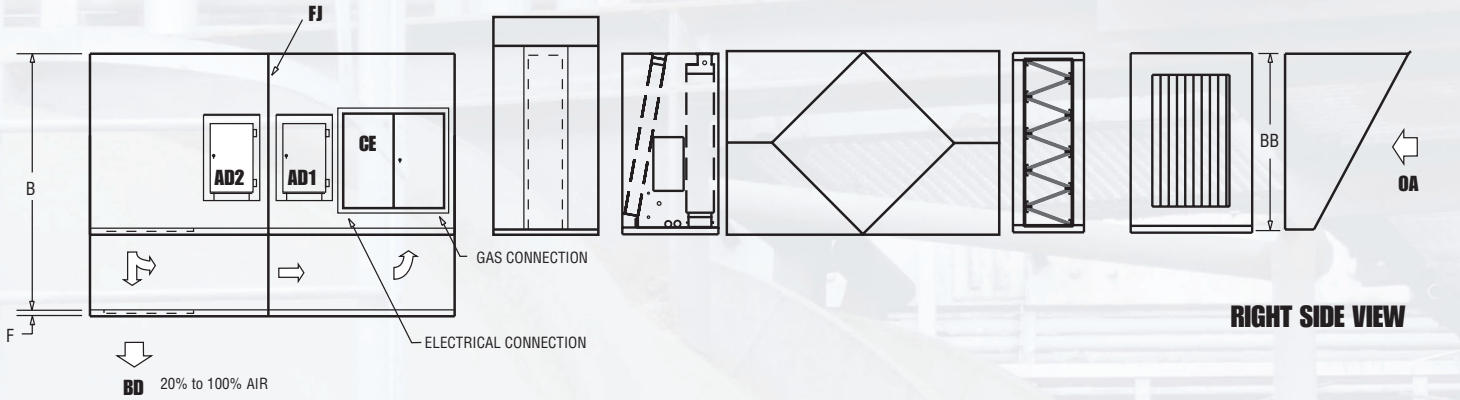

Dimensions

Model	Air Handler Width	Air Handler Height	Air Handler Length			Base Frame Formed Channel	Base Frame Structural Angle	Filter Section Width	Minimum Leg Height			Discharge Length	Discharge Width	Filter Section Length	Plenum Width	Plenum Length	Inlet Hood Length	Plenum Height
	A	B	C	D	E	F		G	H	J	K	L	M	N	X	Y	Z	BB
TT0510	40	59	109	-		4	-	62	36	4	5.5	24	29	30	40	60	48	40
TT1025	58	84	120	-		4	-	62	36	5	5.5	32	47	30	63	77	72	63
TT1530	63	94	130	-		4	-	81	36	6	6.5	35	50	30	63	77	84	63
TT2035	69	102	137	-		4	-	81	36	6	6.5	35	56	30	76	84	84	76
TT2545	76	109	140	-		4	-	81	36	6	6.5	40	63	30	76	84	84	76
TT3060	94	138	154	90	64	6	-	100	48	6	6.5	43	81	30	94	77	96	94
TT3580	104	140	158	94	64	6	-	119	48	6	6.5	43	91	30	112	120	96	96
TT4095	112	137	163	94	69	-	3	119	48	6	6.5	43	99	30	112	120	96	96
TT5515	131	156	177	81	96	-	4	139	48	6	7.5	43	116	30	131	138	96	112

Estimated Shipping Weights

Model	Horizontal Fan Section	Horizontal Burner Section	Filter Section	Inlet Hood	Inlet Plenum
TT0510	1,564		320	80	343
TT1025	2,585		465	135	657
TT1530	2,982		525	210	661
TT2035	3,413		600	226	866
TT2545	3,804		640	248	870
TT3060	3,333	2,396	760	395	1,157
TT3580	3,711	2,626	875	410	1,635
TT4095	4,959	2,842	1,125	425	2,052
TT5515	4,971	5,699	1,400	590	2,128

TT VAV UPRIGHT MODEL

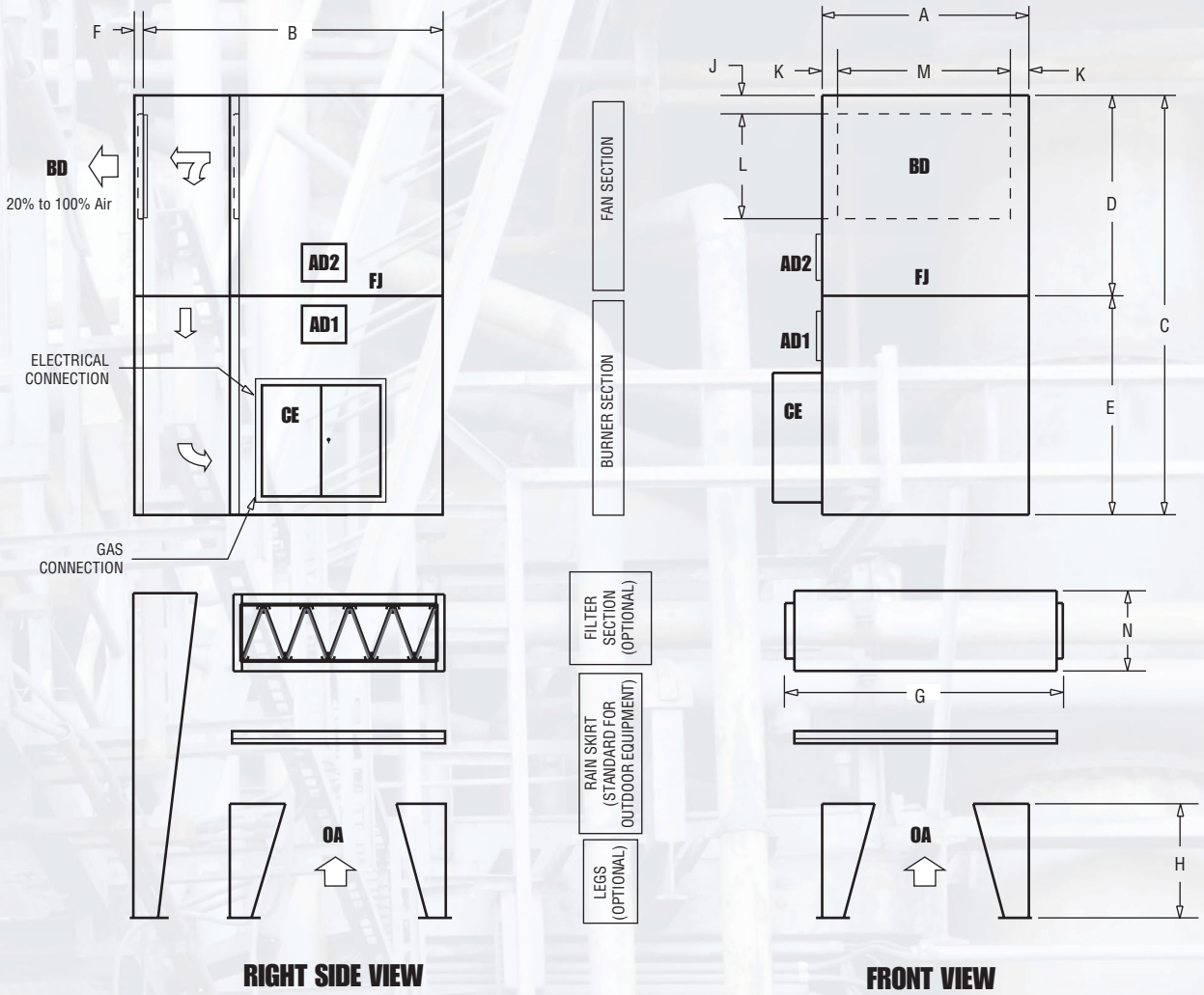

RIGHT SIDE VIEW **FRONT VIEW**

LEGEND

***OA** = Outside Air*

***CE** = Control Enclosure*

***BD** = Bottom Discharge*

***FJ** = Field Joint*
(Models TT3050 - TT5515)

***AD1** = Access Door*
(Model TT5515)

***AD2** = Access Door*
(Models TT0510 - TT4095)

IMPORTANT NOTES:

- All dimensions are in inches.
- All weights are in pounds.
- All dimensions and weights are subject to change without notice.
- Dimensions apply to both horizontal and upright units.
- Filters are shipped loose.
- Legs are shipped loose. Models TT0510-TT2545 require four legs. Models TT3050-TT5515 require six legs.
- Control enclosure for 3" or smaller manifolds is 57" H x 57" W x 25" D. (B dimension of Model TT0510 cabinet size is approximately 20" smaller than the control enclosure. Model TT2545 control enclosure is 57" H x 57" W x 20" D.)
- To minimize the potential for water entrainment, an inlet hood with moisture limiter or inlet plenum may be desirable.
- Outdoor air duct size varies. Consult Weather-Rite.
- Control enclosure can be located on left or right side of unit. (Shown on right side in drawings)

Model	Estimated Shipping Weights	
	Upright Fan Section	Upright Burner Section
TT0510	1,589	
TT1025	2,627	
TT1530	3,033	
TT2035	3,470	
TT2545	3,870	
TT3060	3,323	2,489
TT3580	3,879	2,278
TT4095	5,293	3,051
TT5515	5,373	5,833

EVAPORATIVE COOLING

Formulas	
1	Leaving Dry Bulb = ODB – [SE* x (ODB - OWB)]
2	Leaving Wet Bulb = Entering Wet Bulb (actually, it's slightly less than the entering wet bulb, but is normally considered equal.)
3	Wet Bulb Depression = ODB – OWB
4	Evaporation Rate (GPH) = CFM x WBD x SE/8050
5	Bleed-off Rate = approximately 20% of evaporation rate*
6	Recirculation Rate = approximately 3 times evaporation rate*

Abbreviations	
CFM	Cubic Feet Per Minute
GPH	Gallons Per Hour
IDB	Indoor (Design) Dry Bulb Temperature
LDB	Leaving Dry Bulb Temperature
LWB	Leaving Wet BulbTemperature
ODB	Outdoor (Design) Dry Bulb Temperature
OWB	Outdoor (Design) Wet Bulb Temperature
SE	Saturation Efficiency of the Evaporative Media
WBD	Wet Bulb Depression

* Bleed-off and recirculation rates will vary with locale, water quality and chemical treatment program.
These values are only for approximation.

IMPORTANT NOTES:

Refer to saturation efficiency table below.

Wet Bulb Depression (°F)	Evaporation Rate - Gallons per Hour (GPH) Per 1,000 Cubic Feet per Minute (CFM) at Stated Saturation Efficiency									
	0.80	0.82	0.84	0.86	0.88	0.90	0.92	0.94	0.96	0.98
5	0.50	0.51	0.52	0.53	0.55	0.56	0.57	0.58	0.60	0.61
10	0.99	1.02	1.04	1.07	1.09	1.12	1.14	1.17	1.19	1.22
15	1.49	1.53	1.56	1.60	1.64	1.68	1.71	1.75	1.79	1.83
20	1.99	2.04	2.09	2.14	2.19	2.23	2.28	2.33	2.38	2.43
25	2.48	2.55	2.61	2.67	2.73	2.79	2.86	2.92	2.98	3.04
30	2.98	3.05	3.13	3.20	3.28	3.35	3.43	3.50	3.58	3.65
35	3.48	3.56	3.65	3.74	3.82	3.91	4.00	4.08	4.17	4.26
40	3.97	4.07	4.17	4.27	4.37	4.47	4.57	4.67	4.77	4.87
45	4.47	4.58	4.69	4.80	4.92	5.03	5.14	5.25	5.36	5.48

- Heat of vaporizaton = 1043 BTU/lb
- Weight of water = 8.34 lb./Gallon
- GPH = CFM x WBD x SE x 1.08/1043/8.34 = CFM x WBD x SE/8050

Suggested Air Changes Per Hour (Air Change Method)

Leaving Air Temperature (°F DB)	Indoor Air Temperature Above Ambient (°F)*	Air Changes/ Hour**
78°	20°	30 - 60
76° - 78°	15° - 20°	20 - 40
74° - 76°	10° - 15°	15 - 30
72° - 74°	5° - 15°	12 - 20
< 72°	< 10°	10 - 15

* For existing buildings: Average amount indoor temperature exceeds ambient outdoor temperature when evaporative cooling is not in use.

** Experience has shown that significant benefit can be achieved with 10-15 Air Changes per Hour (AC/Hr) through the lowest 12' of the facility. For a 24' high building, this would mean 5-6 Air Changes per Hour (AC/Hr) for the entire volume. This will vary by application.

Airflow-Feet per Minute (FPM)	Saturation Efficiency at Stated Media Depth (in)				
	6"	8"	12"	18"	24"
400	0.71	0.81	0.90	0.98	0.99
500	0.68	0.79	0.89	0.98	0.99
600	0.66	0.77	0.88	0.97	0.99
700	0.64	0.75	0.87	0.97	0.98

Airflow-Feet per Minute (FPM)	Static Pressure Drop (in wc) at Stated Media Depth (in)				
	6"	8"	12"	18"	24"
400	0.06	0.09	0.14	0.19	0.24
500	0.09	0.14	0.21	0.30	0.39
600	0.13	0.20	0.30	0.42	0.55
700	0.23	0.31	0.44	0.62	0.80

IMPORTANT NOTES:

Moisture limiter pressure drop is added for face velocities greater than 600 Feet per Minute (FPM). Weather-Rite's standard media thickness equals 12".

EVAPORATIVE COOLING

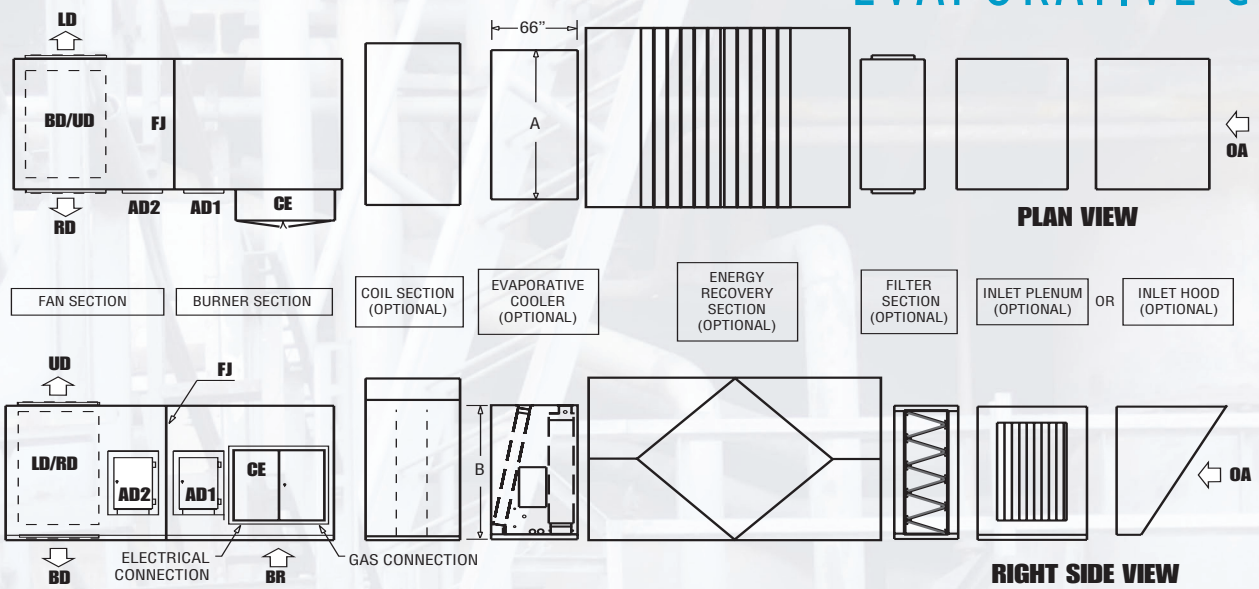

IMPORTANT NOTES:

- For unit dimensions, see pages 12, 14, 18. For legends, see pages 13, 15, 17, 19.
- All dimensions are in inches and all weights are in pounds.
- All dimensions and weights are subject to change without notice.

Applicable Cabinet	Model 550 FPM	Max CFM	Applicable Cabinet	Model 750 FPM	Max CFM	Dimensions	
						A	B
TT0510	ECM24	4,000	TT0510	ECM24D	5,800	40	40
TT0510-TT1025	ECM36	10,000	TT1025	ECM36D	13,700	58	58
TT1025	ECM40	12,000	TT1025-TT1530	ECM40D	16,600	63	63
TT1025	ECM44	14,500	TT1025-TT2035	ECM44D	19,600	69	69
TT1025-TT1530	ECM49	17,700	TT1025-TT2545	ECM49D	24,300	76	76
TT1025-TT2545	ECM54	23,000	TT2035-TT2545	ECM54D	31,200	85	85
TT1530-TT2545	ECM60	28,000	TT2545-TT3060	ECM60D	38,500	94	94
TT2035-TT2545	ECM66	31,600	TT2545-TT3580	ECM66D	43,100	104	96
TT2035-TT2545	ECM73	34,100	TT2545-TT3580	ECM73D	46,600	112	96
TT2545-TT3580	ECM80 / ECM89	48,000	TT3580-TT5515	ECM-80D / ECM89D	65,300	131	112

LEAVING DRY BULB TEMPERATURE DROP [AVERAGE]

Wet Bulb Depression (°F)	Temperature Drop (°F) For Stated Media Depth (in)				
	6"	8"	12"	18"	24"
10.0	6.8	7.9	8.9	9.8	9.9
12.5	8.5	9.8	11.1	12.2	12.3
15.0	10.2	11.8	13.3	14.6	14.8
17.5	11.9	13.8	15.6	17.1	17.3
20.0	13.6	15.8	17.8	19.5	19.7
22.5	15.3	17.7	20.0	21.9	22.2
25.0	17.0	19.7	22.2	24.4	24.7
27.5	18.7	21.7	24.4	26.8	27.2
30.0	20.4	23.6	26.7	29.3	29.6
32.5	22.1	25.6	28.9	31.7	32.1
35.0	23.8	27.6	31.1	34.1	34.6
37.5	25.5	29.5	33.3	36.6	37.0
40.0	27.2	31.5	35.6	39.0	39.5

IMPORTANT NOTES:

Evaporative Cooling Section is 42". Transition section is 24". Total length is 66". Applicable for MUA/AM/VAV styles only.

IMPORTANT NOTES:

Weather-Rite's standard media thickness equals 12".

AIR DENSITY RATIO

Temperature (°F)	Density Ratio For Stated Elevation (ft/in HG)										
	0/ 29.92	1,000/ 28.86	2,000/ 26.82	3,000/ 26.82	4,000/ 25.84	5,000/ 24.90	6,000/ 23.98	7,000/ 23.09	8,000/ 22.22	9,000/ 21.39	10,000/ 20.58
68°	1.00	0.97	0.93	0.90	0.87	0.84	0.80	0.77	0.75	0.72	0.69
70°	1.00	0.96	0.93	0.90	0.86	0.83	0.80	0.77	0.74	0.71	0.69
72°	1.00	0.96	0.93	0.89	0.86	0.83	0.80	0.77	0.74	0.71	0.69
74°	0.99	0.96	0.92	0.89	0.86	0.83	0.80	0.77	0.74	0.71	0.68
76°	0.99	0.95	0.92	0.89	0.85	0.82	0.79	0.76	0.73	0.71	0.68
78°	0.99	0.95	0.92	0.88	0.85	0.82	0.79	0.76	0.73	0.70	0.68
80°	0.98	0.95	0.91	0.88	0.85	0.82	0.79	0.76	0.73	0.70	0.68

IMPORTANT NOTES:

Table to be used when calculating total tonnage of cooling adjusted for elevation.

MECHANICAL COOLING

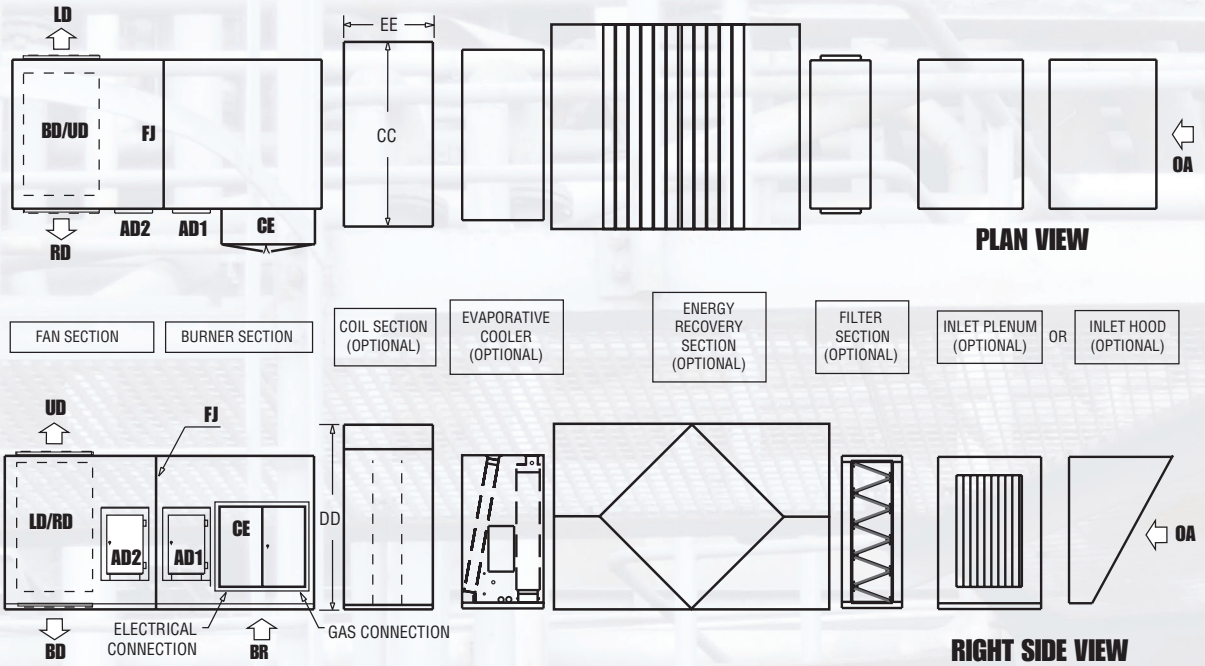

IMPORTANT NOTES:

- For unit dimensions, see page 12, 14, 18. For legends, see pages 13, 15, 17, 19.
- All dimensions are in inches and all weights are in pounds.
- All dimensions and weights are subject to change without notice.

Airflow - Cubic Feet per Minute (CFM)	Compatible Cabinet Sizes	Range Of Available Tons Of Cooling	Quantity Of Coils	Square Feet	Fin Area (L x H) Of Each Coil (in)	Coil Face Velocity		Width	Height	Length
						Low	High	CC	DD	EE
3,000-7,000	TT0510	8-35	1	13.8	33 x 60	218	509	68	40	72
7,001-10,000	TT0510	18-50	1	18.0	36 x 72	389	556	80	44	72
10,001-20,000	TT1025-TT1530	25-100	2	38.3	27 x 102	261	523	110	65	72
20,001-27,500	TT1025-TT2035	50-138	2	52.5	35 x 108	381	524	116	80	78
27,501-30,000	TT1530-TT2545	69-150	2	61.2	39 x 113	449	490	121	90	78
30,001-35,000	TT2545-TT3060	75-175	2	70.0	41 x 123	428	500	131	96	84
35,001-50,000	TT3060-TT4095	88-250	2	93.8	45 x 150	373	533	158	105	84
50,001-60,000	TT3580-TT5510	125-300	3	106.5	36 x 142	469	563	150	126	102
60,001-65,000	TT4095-TT5515	150-325	3	117.0	36 x 156	513	556	164	126	102

Airflow - Cubic Feet per Minute (CFM)	0% OA/ 100% RA	25% OA/ 75% RA	50% OA/ 50% RA	75% OA/ 25% RA	100% OA/ 0% RA
	Estimated tons of cooling required to achieve 55/54 leaving air condition (chart based on OA conditions of 94/74 and RA conditions of 80/67)				
5,000	16	19	22	24	27
7,500	24	28	33	35	41
10,000	32	38	44	47	54
12,500	39	47	55	59	68
15,000	47	56	66	71	81
20,000	63	75	88	95	108
25,000	79	94	110	118	135
30,000	95	113	132	142	162
35,000	110	131	154	165	189
40,000	126	150	176	189	216
45,000	142	169	197	213	243
50,000	158	188	219	236	270
55,000	173	206	241	260	297
60,000	189	225	263	284	324
65,000	205	244	285	308	351

STEAM/HOT WATER COILS

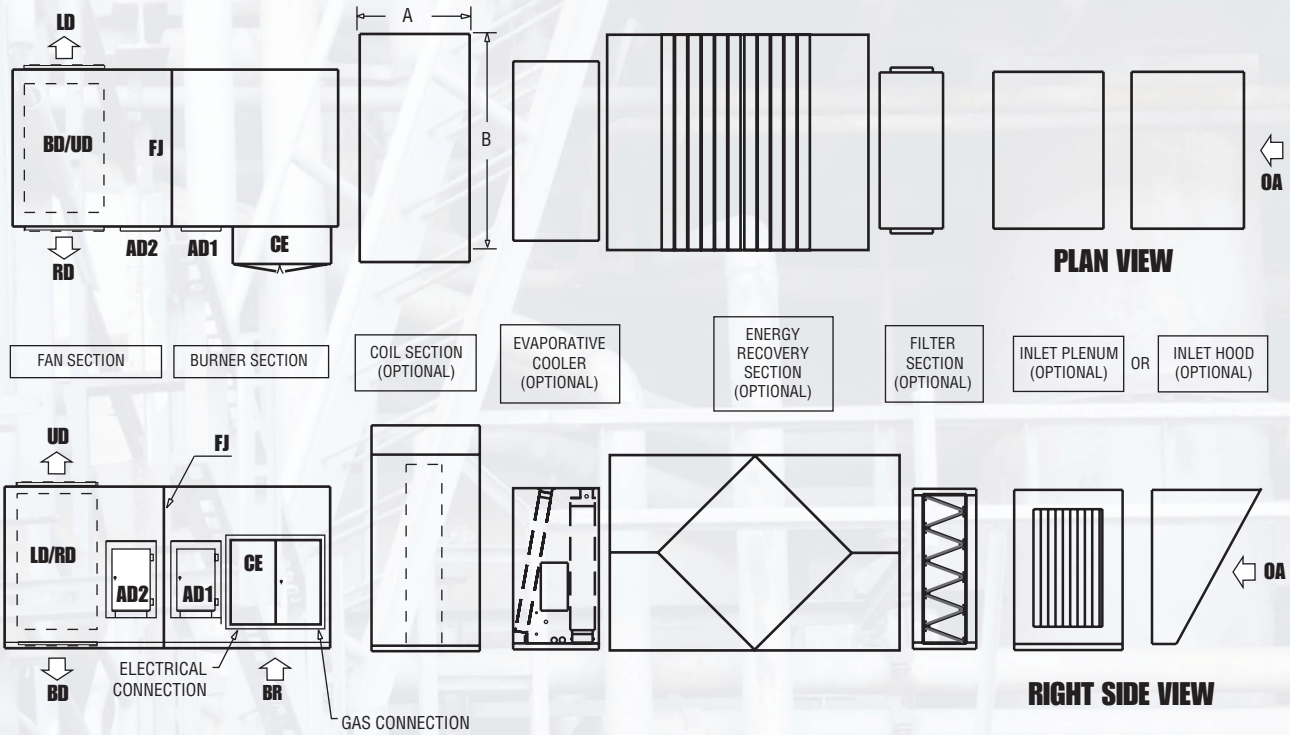

IMPORTANT NOTES:

- For unit dimensions, see page 12, 14, 18. For legends, see pages 13, 15, 17, 19.
- All dimensions are in inches and all weights are in pounds.
- All dimensions and weights are subject to change without notice.
- Coil section weights listed below do not include the internal coil weight. The weights shown below are for the housings only. Consult factory for complete coil section weights.

Maximum CFM	Applicable Model	Length A	Width B	Weight
10,000	TT0510	30	62	320
17,500	TT1025	30	62	465
25,000	TT1530	30	81	525
30,000	TT2035	30	81	600
35,000	TT2545	30	81	640
50,000	TT3060	30	100	760
65,000	TT3580-TT4095	30	119	1,125
		30	119	
85,000	TT5515	30	139	1,400
		30	139	

ENERGY RECOVERY

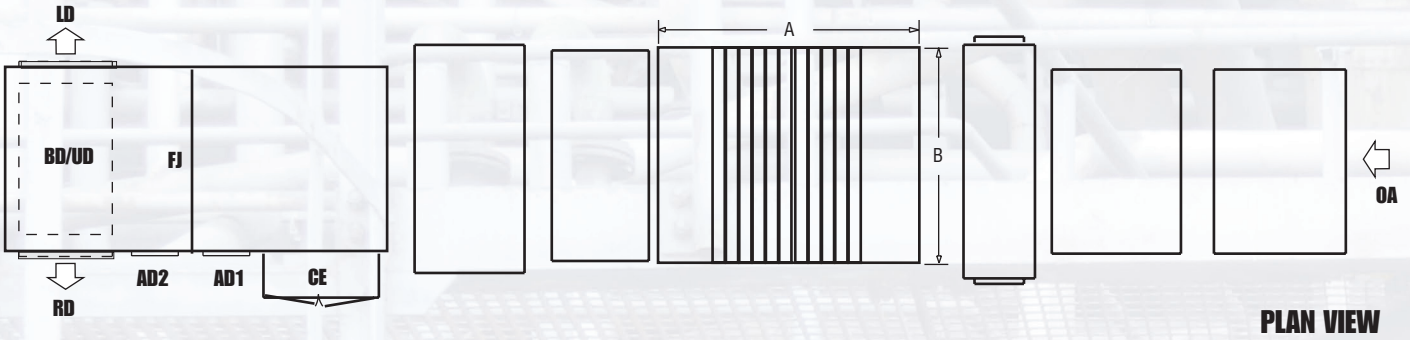

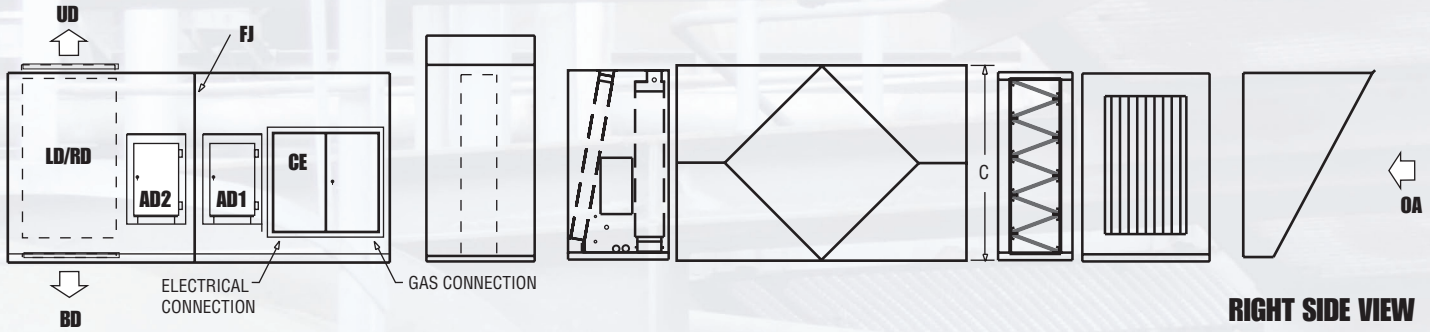

IMPORTANT NOTES:

- For unit dimensions, see page 12, 14, 18. For legends, see pages 13, 15, 17, 19.
- All dimensions are in inches and all weights are in pounds.
- All dimensions and weights are subject to change without notice.

Applicable Model		Airflow - Cubic Feet per Minute (CFM)	Dimensions			Estimated Weights					
			Length	Width	Height						
MUA	AM		A	B	C	Module	Inlet Hood	Exhaust Fan	Exhaust Hood	Downturn Section	Filter Housing
TT0510	TT0510	4,000-7,000	109	58	69	1,000	150	400	150	250	225
TT1025	TT1025	7,001-15,000	120	85	94	1,900	200	550	200	450	425
		15,001-20,000	130	94	96	2,000	200	800	225	450	425
TT1530	TT1530	20,001-25,000	137	94	123	2,700	300	800	250	550	475
	TT2035	25,001-30,000	140	108	123	2,900	300	800	250	600	550
TT2035	TT2545	30,001-35,000	150	131	123	4,800	300	1,280	275	750	600
TT3050	TT3060	40,001-50,000	164	178	123	5,800	350	1,673	300	1,050	800
TT3060	TT3580	50,001-60,000	164	212	123	6,400	400	1,924	325	1,300	925

ENERGY RECOVERY PERFORMANCE

Compatible Cabinet Size		Supply/ Exhaust Air - Cubic Feet per Minute (CFM)	Pressure Drop (in wc)		Efficiency		Air Velocity Supply (face/channel) (ft/min)	
MUA	AM		Supply	Exhaust	Supply	Exhaust	Supply	Exhaust
TT0510	TT0510	4,000	0.42	0.45	59%	59%	329.19 / 851.18	367.34 / 889.82
		5,000	0.63	0.67	60%	60%	411.49 / 1,064.04	459.17 / 1,112.20
		6,000	0.88	0.94	59%	59%	493.79 / 1,276.74	551.01 / 1,334.75
		7,000	1.17	1.25	59%	59%	576.09 / 1,489.31	642.84 / 1,557.43
TT1025	TT1025	7,001	0.29	0.30	63%	61%	240.04 / 632.20	267.85 / 658.93
		8,000	0.37	0.39	63%	61%	274.33 / 722.60	306.12 / 752.99
		9,000	0.45	0.48	63%	61%	308.62 / 812.94	344.38 / 847.09
		10,000	0.55	0.59	63%	61%	342.91 / 903.25	382.64 / 941.23
		11,000	0.66	0.70	63%	61%	377.20 / 993.53	420.91 / 1,035.40
		12,000	0.77	0.82	63%	61%	411.49 / 1,083.78	459.17 / 1,129.59
		13,000	0.89	0.95	63%	61%	445.78 / 1,174.00	497.44 / 1,223.81
		14,000	1.03	1.09	63%	61%	480.08 / 1,264.21	535.70 / 1,318.05
		15,000	1.17	1.24	63%	61%	514.37 / 1,354.39	573.97 / 1,412.31
		15,001	0.70	0.74	62%	61%	403.43 / 1,021.84	450.17 / 1,065.94
		16,000	0.79	0.84	62%	60%	430.32 / 1,089.88	480.18 / 1,137.09
		17,000	0.88	0.94	62%	60%	457.22 / 1,157.91	510.19 / 1,208.25
		18,000	0.98	1.05	62%	60%	484.11 / 1,225.92	540.20 / 1,279.42
		19,000	1.08	1.16	62%	60%	511.01 / 1,293.92	570.22 / 1,350.60
		20,000	1.19	1.27	61%	60%	537.90 / 1,361.91	600.23 / 1,421.78
TT1530	TT1530	20,001	0.72	0.77	62%	60%	457.22 / 1,130.29	510.19 / 1,179.84
		21,000	0.79	0.85	61%	60%	480.08 / 1,186.72	535.70 / 1,238.92
		22,000	0.87	0.92	61%	60%	502.94 / 1,243.14	561.21 / 1,297.99
		23,000	0.94	1.00	61%	60%	525.80 / 1,299.55	586.72 / 1,356.99
		24,000	1.02	1.09	61%	59%	548.66 / 1,355.95	612.23 / 1,415.99
		25,000	1.10	1.17	61%	59%	571.52 / 1,412.35	637.74 / 1,474.99
TT1530	TT2035	25,001	0.83	0.89	61%	60%	489.87 / 1,218.80	546.64 / 1,272.52
		26,000	0.90	0.96	61%	60%	509.47 / 1,267.47	568.50 / 1,323.44
		27,000	0.96	1.03	61%	60%	529.06 / 1,316.14	590.37 / 1,374.35
		28,000	1.03	1.10	61%	59%	548.66 / 1,364.80	612.23 / 1,425.25
		29,000	1.10	1.17	61%	59%	568.25 / 1,413.45	634.10 / 1,476.15
		30,000	1.17	1.25	61%	59%	587.85 / 1,462.10	655.96 / 1,527.05
		30,000	0.87	0.92	61%	60%	493.79 / 1,243.14	551.01 / 1,297.99
TT2035	TT2545	31,001	0.92	0.98	61%	60%	510.25 / 1,284.50	569.38 / 1,341.26
		32,000	0.98	1.04	61%	60%	526.71 / 1,325.87	587.74 / 1,384.53
		33,000	1.03	1.10	61%	59%	543.17 / 1,367.23	606.11 / 1,427.79
		34,000	1.09	1.17	61%	59%	559.63 / 1,408.59	624.48 / 1,471.06
		35,000	1.15	1.23	61%	59%	576.09 / 1,449.94	642.84 / 1,514.32
TT2545	TT3060	35,001	0.93	0.99	61%	60%	514.37 / 1,289.10	573.97 / 1,346.07
		36,000	0.98	1.04	61%	60%	529.06 / 1,325.87	590.37 / 1,384.53
		37,000	1.03	1.10	61%	59%	543.76 / 1,362.63	606.77 / 1,422.98
		38,000	1.08	1.15	61%	59%	558.46 / 1,399.40	623.16 / 1,461.44
		39,000	1.13	1.21	61%	59%	573.15 / 1,436.16	639.56 / 1,499.90
		40,000	1.19	1.27	61%	59%	587.85 / 1,472.92	655.96 / 1,538.36
TT3060	TT3060	40,001	0.79	0.84	61%	60%	477.09 / 1,184.03	532.38 / 1,236.11
		42,000	0.87	0.92	61%	60%	500.95 / 1,243.14	558.99 / 1,297.99
		44,000	0.94	1.01	61%	60%	524.80 / 1,302.23	585.61 / 1,359.80
		46,000	1.02	1.09	61%	59%	548.66 / 1,361.32	612.23 / 1,421.61
		48,000	1.11	1.18	61%	59%	572.51 / 1,420.40	638.85 / 1,483.42
		50,000	1.20	1.28	61%	59%	596.37 / 1,479.48	665.47 / 1,545.23
TT3060	TT3580	50,001	0.83	0.89	61%	60%	489.87 / 1,218.80	546.64 / 1,272.52
		52,000	0.90	0.96	61%	60%	509.47 / 1,267.47	568.50 / 1,323.44
		54,000	0.96	1.03	61%	60%	529.06 / 1,316.14	590.37 / 1,374.35
		56,000	1.03	1.10	61%	59%	548.66 / 1,364.80	612.23 / 1,425.25
		58,000	1.10	1.17	61%	59%	568.25 / 1,413.45	634.10 / 1,476.15
		60,000	1.17	1.25	61%	59%	587.85 / 1,462.10	655.96 / 1,527.05

ONE-WAY DISCHARGE HEAD

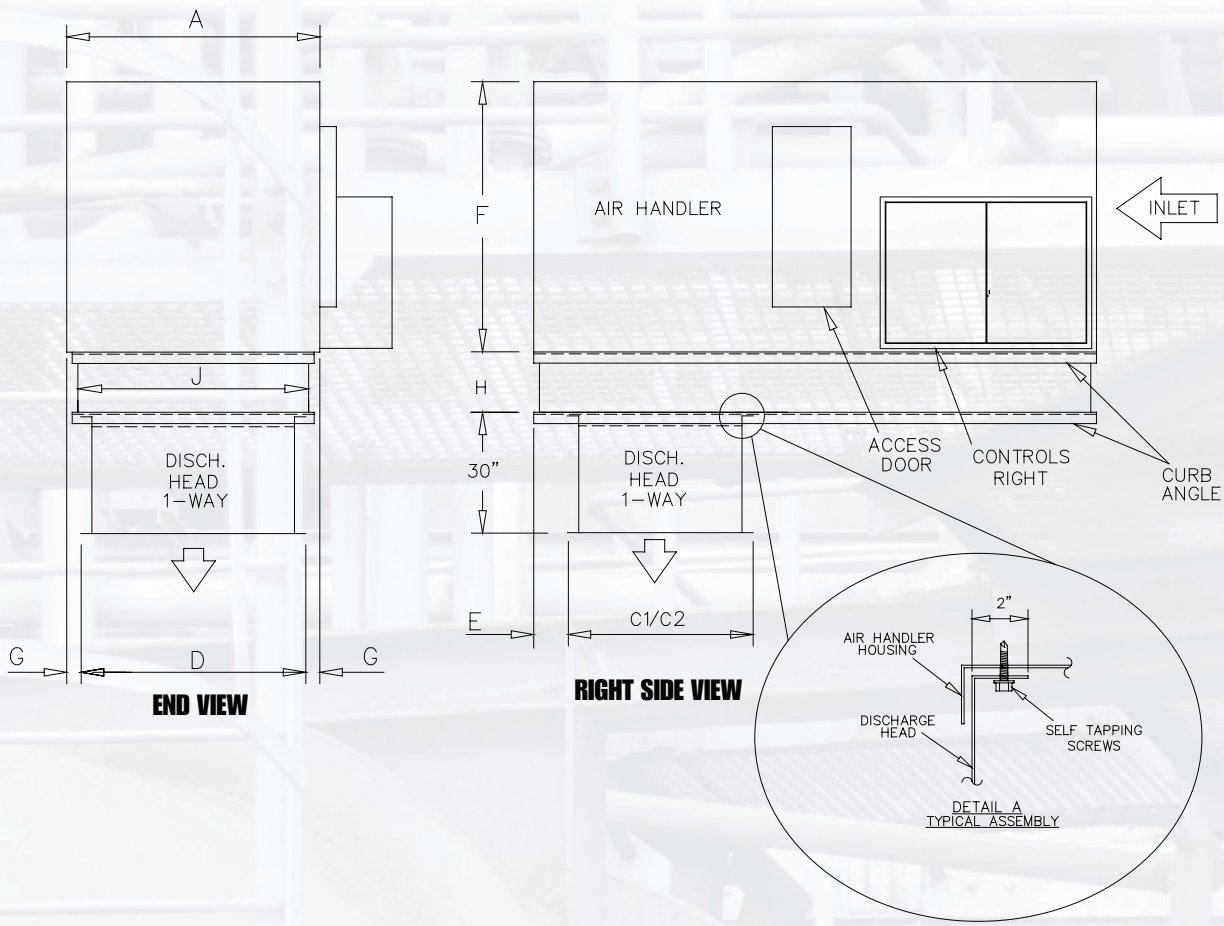

IMPORTANT NOTES:

- All dimensions are in inches.
- All weights are in pounds.
- All dimensions and weights are subject to change without notice.
- The discharge head has manually adjustable horizontal blades (vertical blades are optional).
- Discharge head requires field support and mounting by installer.
- Dimensions C2 (Discharge Inside 2), H and J only applicable to VAV units.

Dimensions												Weight
Model	A	C1	C2	D	E	F	G	H	J	Dischage Inside		
										1	2	
TT0510	40	24.3	28.3	33.3	2	40	3.5	19	38	20 x 29	24 x 29	75
TT1025	58	29.3	36.3	51.3	3	58	3.5	26	56	25 x 47	32 x 47	105
TT1530	63	37.3	39.3	54.3	4	63	4.5	31	61	33 x 50	35 x 50	140
TT2035	69	40.3	39.3	60.3	4	69	4.5	33	67	36 x 56	35 x 56	180
TT2545	76	43.3	44.3	67.3	4	76	4.5	33	74	39 x 63	40 x 63	190
TT3060	94	52.3	47.3	85.3	4	94	4.5	44	92	48 x 81	43 x 81	250
TT3580	104	54.3	47.3	95.3	4	96	4.5	44	102	50 x 91	43 x 91	290
TT4095	112	54.3	47.3	103.3	4	96	4.5	41	110	50 x 99	43 x 99	380
TT5515	131	64.3	47.3	120.3	4	112	5.5	44	129	60 x 116	43 x 116	480

THREE-WAY DISCHARGE HEAD

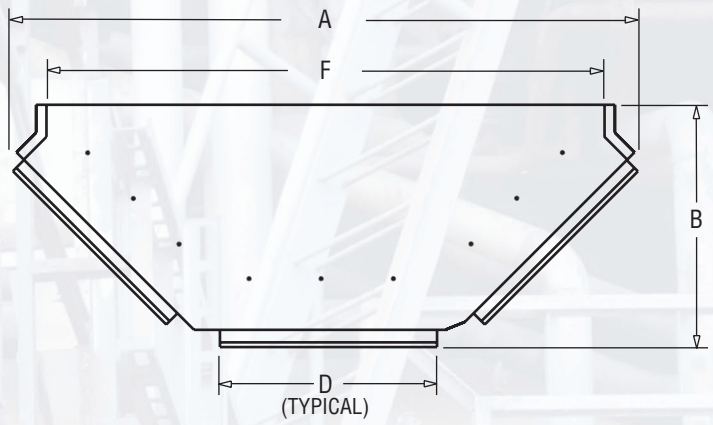

PLAN VIEW

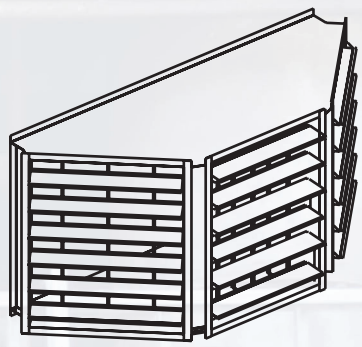

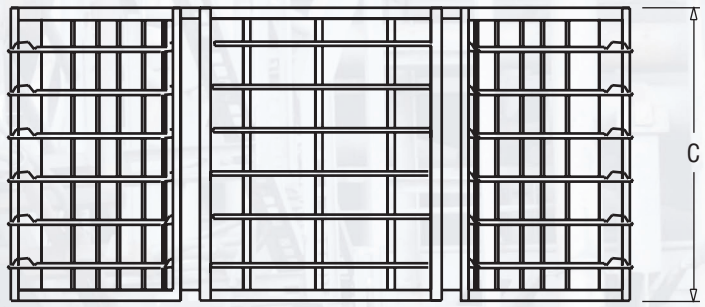

FRONT VIEW

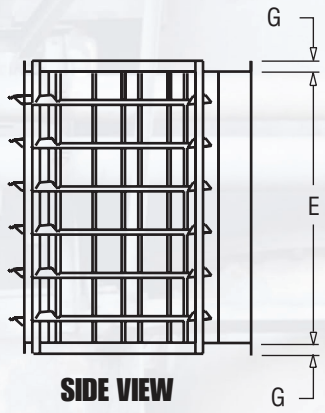

SIDE VIEW

IMPORTANT NOTES:

- All dimensions are in inches.
- All weights are in pounds.
- All dimensions and weights are subject to change without notice.
- The discharge head has manually adjustable horizontal blades (vertical blades are optional).
- Discharge head requires field support and mounting by installer.

	Dimensions							Weight
Model	A	B	C	D	E	F	G	
TT0510	44	25	24.4	14	20.3	29.3	2.1	73
TT1025	62	30	29.4	22	25.3	47.3	2.1	110
TT1530	65	31	37.4	23	33.3	50.3	2.1	128
TT2035	71	32	40.4	26	36.3	56.3	2.1	167
TT2545	78	34	43.4	28	39.3	63.3	2.1	208
TT3060	96	40	52.4	36	48.3	81.3	2.1	272
TT3580	106	43	54.4	40	50.3	91.3	2.1	300
TT4095	114	45	54.4	40	50. 3	99.3	2.1	324
TT5515	131	48	64.4	50	60.3	116.3	2.1	465

FOUR-WAY DISCHARGE HEAD

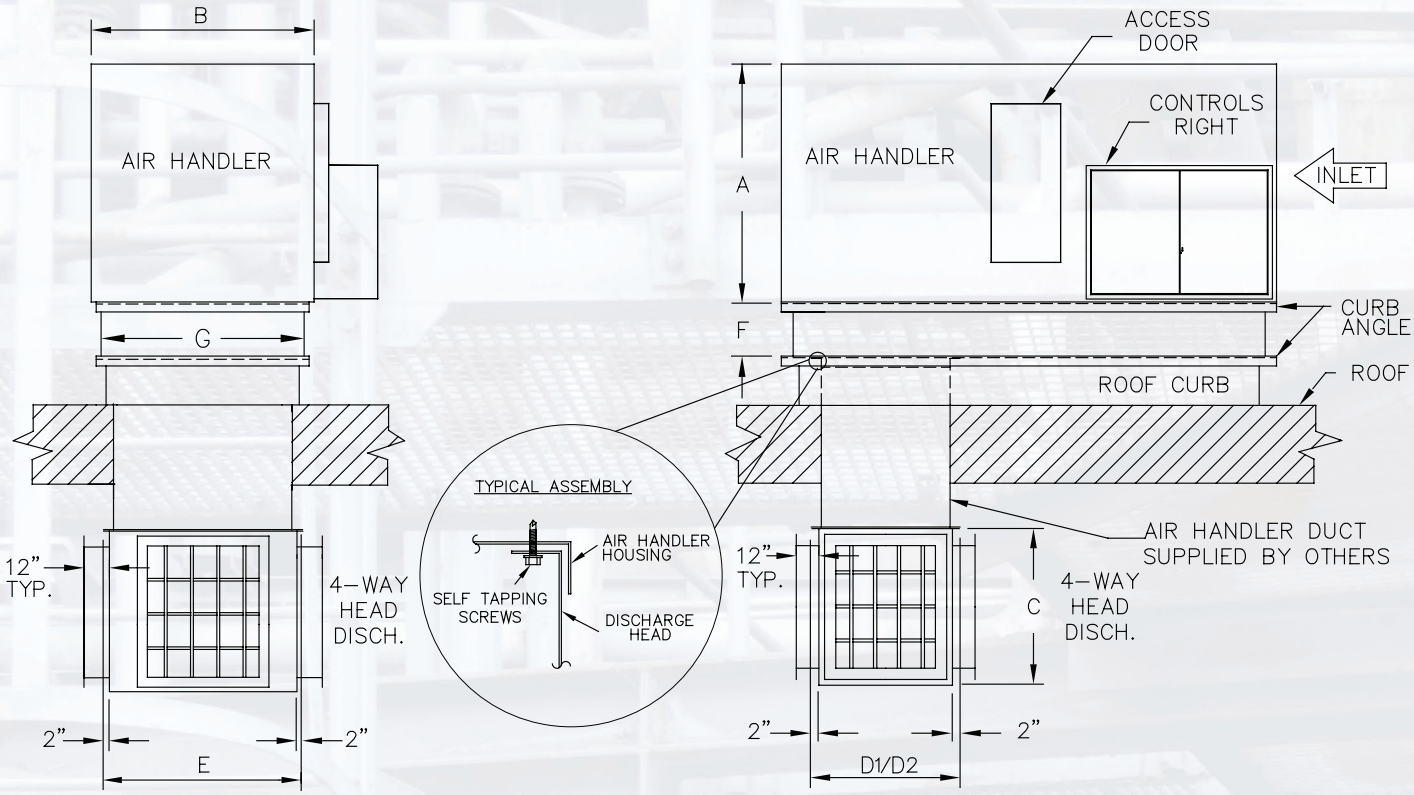

END VIEW **RIGHT SIDE VIEW**

IMPORTANT NOTES:

- All dimensions are in inches.
- All weights are in pounds.
- All dimensions and weights are subject to change without notice.
- The discharge head has manually adjustable horizontal blades (vertical blades are optional).
- Discharge head requires field support and mounting by installer.
- Dimensions D2 (Inside Dimension of Duct Connections 2), F and G only applicable to VAV units.

Model	Dimensions										Weight
	A	B	C	D1	D2	E	F	G	Inside Dimensions of Duct Connections		
									1	2	
TT0510	40	40	46	24.3	28.3	33.3	19	38	20 x 29	24 x 29	220
TT1025	58	58	46	29.3	36.3	51.3	26	56	25 x 47	32 x 47	320
TT1530	63	63	46	37.3	39.3	54.3	31	61	33 x 50	35 x 50	380
TT2035	69	69	46	40.3	39.3	60.3	33	67	36 x 56	35 x 56	410
TT2545	76	76	46	43.3	44.3	67.3	33	74	39 x 63	40 x 63	440
TT3060	94	94	58	52.3	47.3	85.3	44	92	48 x 81	43 x 81	670
TT3580	96	104	58	54.3	47.3	95.3	44	102	50 x 91	43 x 91	680
TT4095	96	112	58	54.3	47.3	103.3	41	110	50 x 99	43 x 99	780
TT5515	112	131	58	64.3	47.3	120.3	44	129	60 x 116	43 x 116	1,090

DISCHARGE PLATE

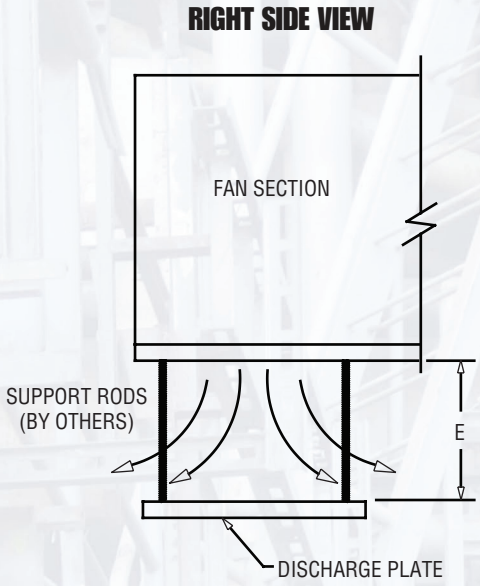

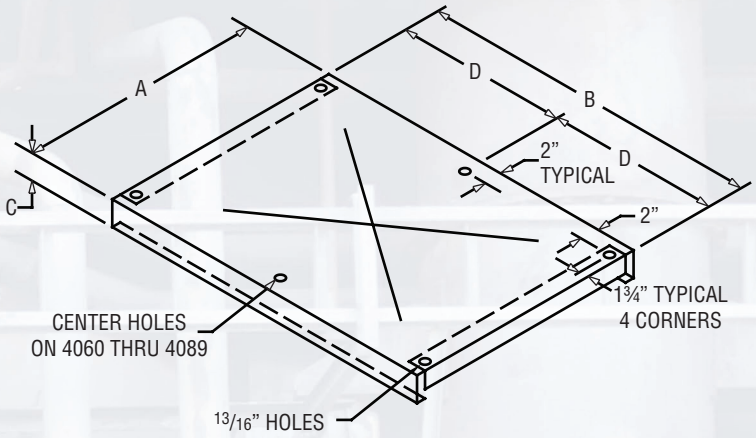

IMPORTANT NOTES:

- All dimensions are in inches.
- All weights are in pounds.
- All dimensions and weights are subject to change without notice.
- Discharge plate requires field support and mounting by installer.

	Dimensions						Weight
Model	A	B	C	D	E (min.)	E (max.)	
TT0510	42	54	3	-	25	38	80
TT1025	47	72	3	-	36	54	110
TT1530	55	75	3	-	42	64	130
TT2035	58	81	3	-	46	70	140
TT2545	61	88	3	-	50	75	160
TT3060	70	106	3	53	64	96	230
TT3580	72	116	3	58	70	105	250
TT4095	72	124	3	62	75	112	260
TT5515	82	140	4	70	88	132	330

LEGS

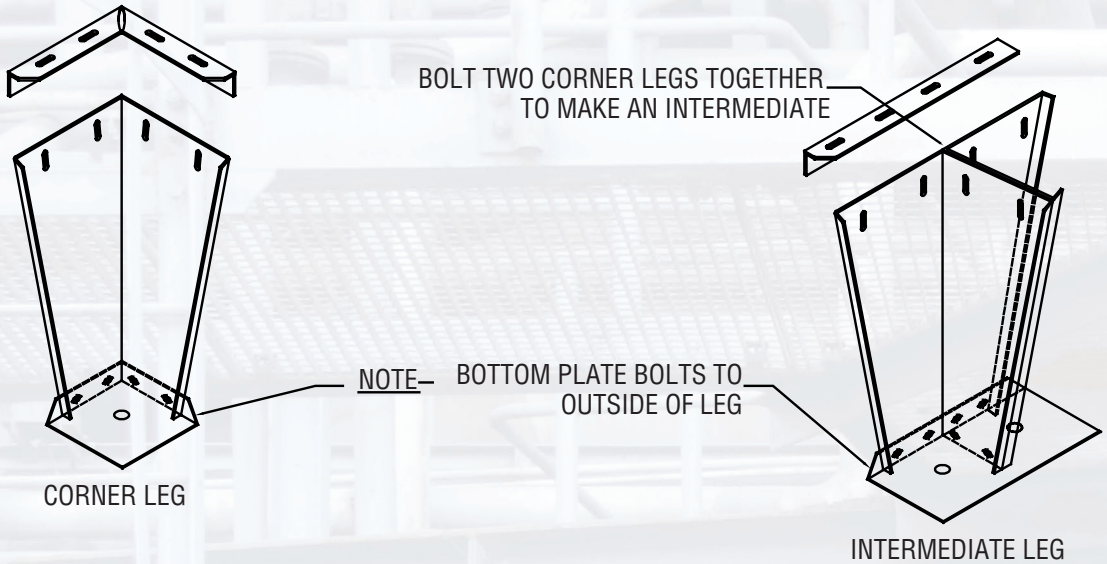

IMPORTANT NOTES:

- All dimensions are in inches.
- All weights are in pounds.
- All dimensions and weights are subject to change without notice.
- Models TT0510 - TT2545 upright air handlers with 84" or 96" legs, angle bracing is provided.

*For models TT1025-TT2545 upright air handlers, 24" legs are not available. For models TT3050-TT5515, 24" and 36" legs are not available.

Leg Height	Weight (each leg)	
	Corner	Intermediate
24	34	74
36	43	92
48	52	108
60	75	156
72	88	182
84	100	206
96	144	294

Orientation	Horizontal					Upright					
Style	AM	FR	MUA	VAV	AM	AM	FR	MUA	VAV	VAV with Filter Section	VAV without Filter Section
Type / Model	Filter Section				Mixbox						
TT0510 TT1025 TT1530 TT2545	Four Corner Legs				Four Corner & Two Intermediate	Four Corner Legs				N/A	N/A
TT3060 TT3580 TT4095 TT5515	Four Corner & Two Intermediate				Four Corner & Four Intermediate	Four Corner Legs*				Six Corner Legs	Six Corner legs

INLET HOODS

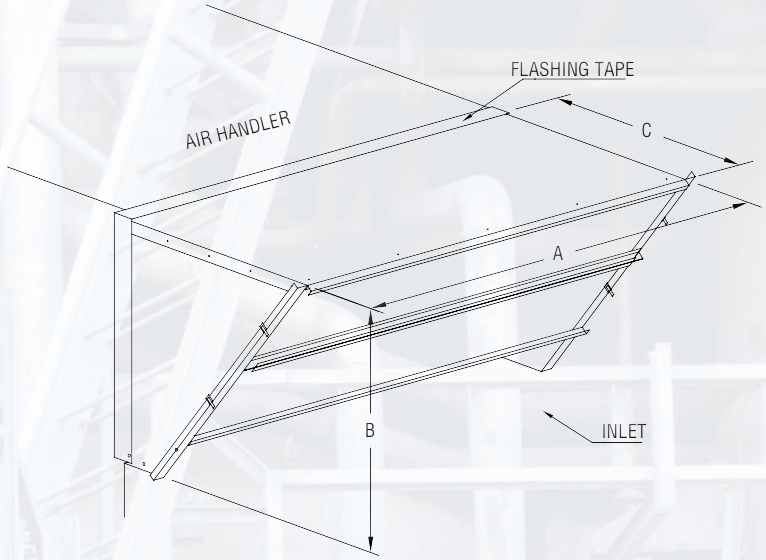

Model	Dimensions A	Dimensions B	Dimensions C	Weight
TT0510	40	21	27	53
TT1025	58	30	35	144
TT1530	63	32.5	37	182
TT2035	69	35.5	39	200
TT2545	76	39	42	220
TT3060	94	48	50	310
TT3580	104	49	51	325
TT4095	112	49	51	335
TT5515	131	57	57	390

IMPORTANT NOTES:

- All dimensions are in inches.
- All weights are in pounds.
- All dimensions and weights are subject to change without notice.

SERVICE PLATFORM

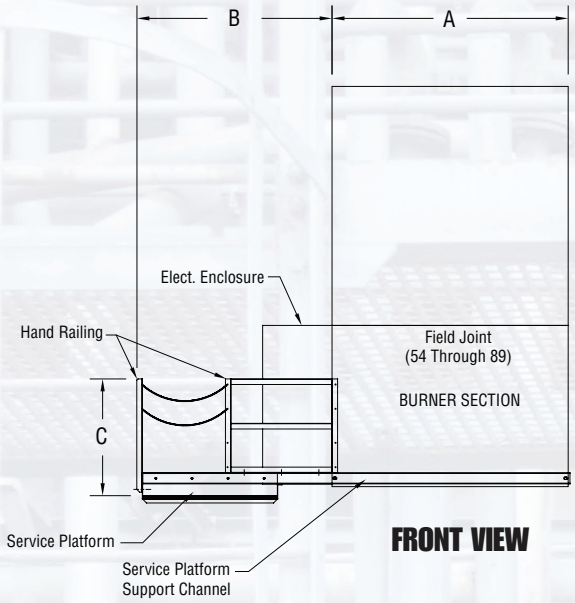

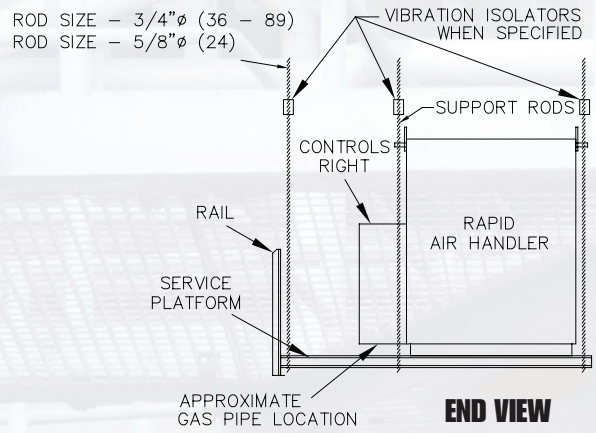

IMPORTANT NOTES:

- All dimensions are in inches.
- All weights are in pounds.
- All dimensions and weights are subject to change without notice.
- The discharge head has manually adjustable horizontal blades (vertical blades are optional).
- Discharge head requires field support and mounting by installer.

	Dimensions			Weight
Model	**A**	**B**	**C**	
TT0510	40	70.25	42	500
TT1025	58	70.25	42	540
TT1530	83	70.25	42	605
TT2035	69	70.25	42	640
TT2545	76	70.25	42	650
TT3060	94	70.25	42	690
TT3580	104	70.25	42	705
TT4095	112	70.25	42	860
TT5515	131	70.25	42	920

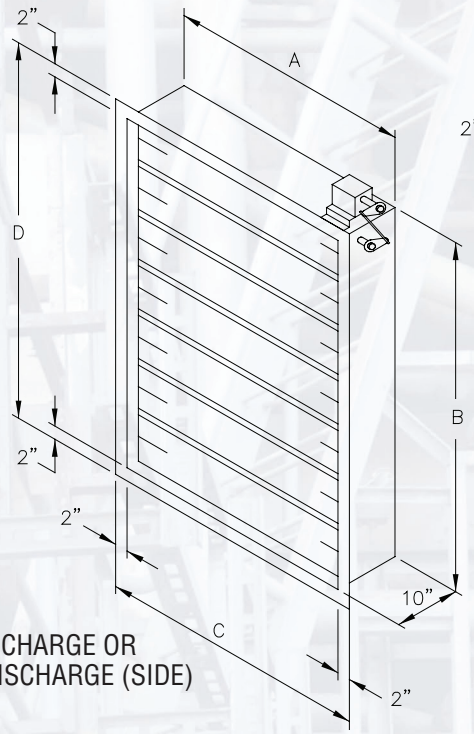

NOTE:
LEFT DISCHARGE OR
RIGHT DISCHARGE (SIDE)

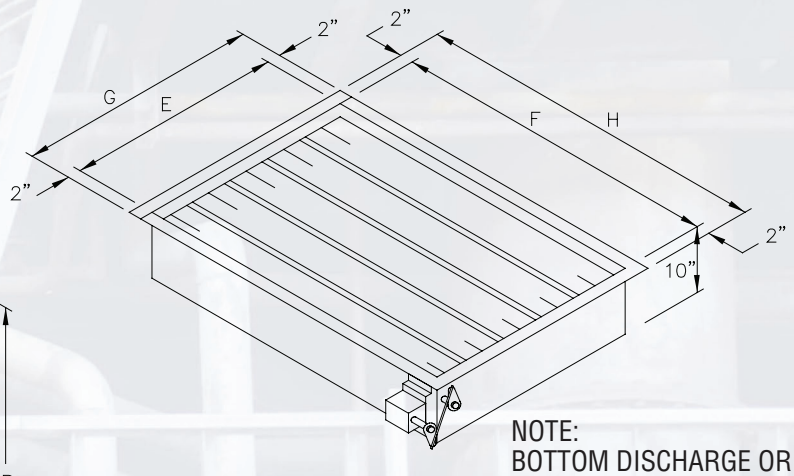

NOTE:
BOTTOM DISCHARGE OR
UP DISCHARGE

NOTE: Discharge damper shown.

IMPORTANT NOTES:

- All dimensions are in inches.
- All weights are in pounds.
- All dimensions and weights are subject to change without notice.
- Damper applicable for MUA, AM and FR style air handlers.

	Dimensions								Weight	
Model	**A**	**B**	**C**	**D**	**E**	**F**	**G**	**H**	**Side**	**Bottom**
TT0510	20	34	24	38	20	29	24	33	66	56
TT1025	25	50	29	54	25	47	29	51	121.5	114
TT1530	33	53	37	57	33	50	37	54	170	160
TT2035	36	59	40	63	36	56	40	60	206.5	196
TT2545	39	66	43	70	39	63	43	67	250	239
TT3060	48	84	5	88	48	81	52	85	392	378
TT3580	50	90	54	94	50	91	54	95	437.5	442
TT4095	50	90	54	94	50	99	54	103	437.5	481
TT5515	60	106	64	110	60	116	64	120	618	677

ROOF CURBS

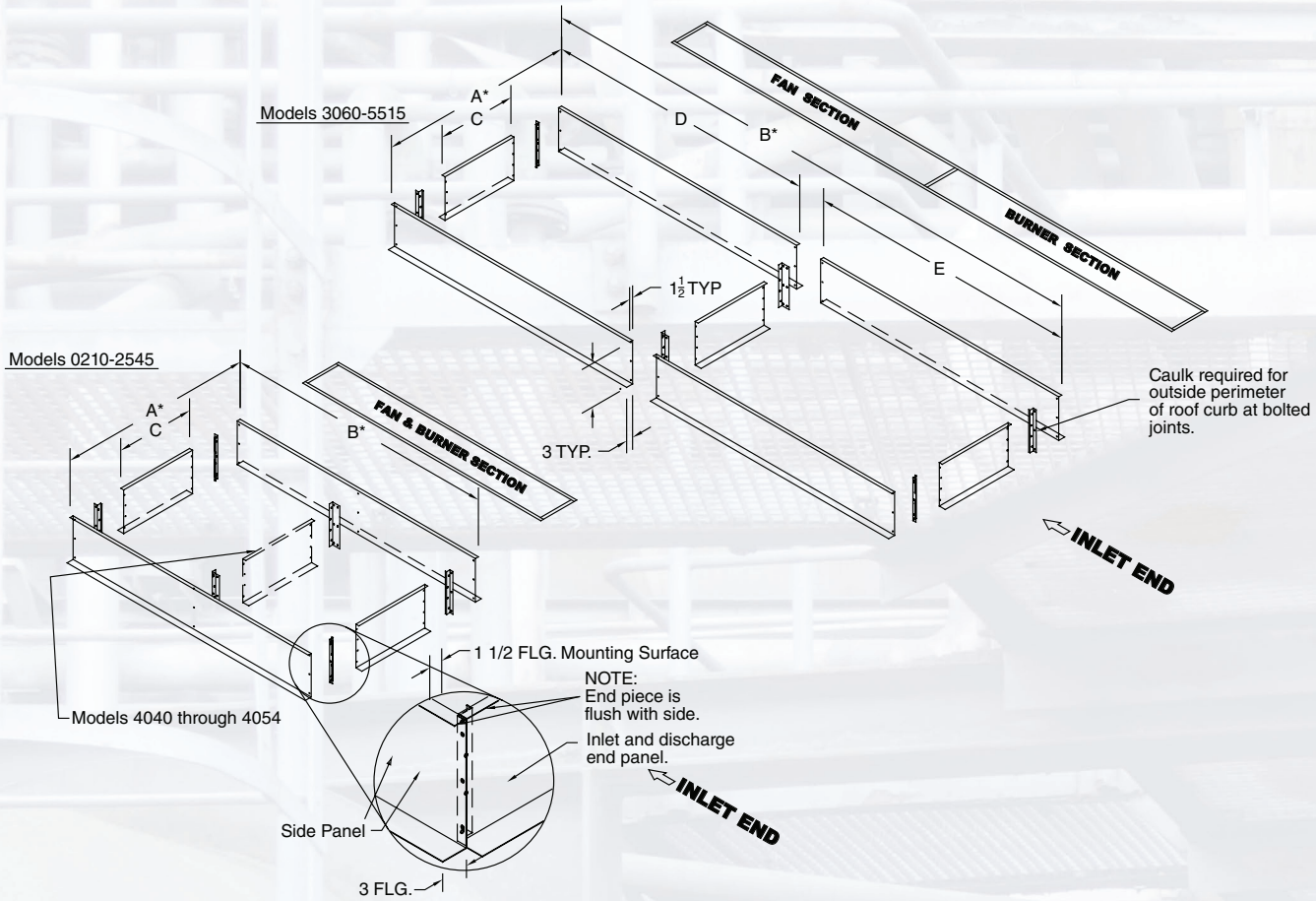

IMPORTANT NOTES:

- All dimensions are in inches.
- All weights are in pounds.
- All dimensions and weights are subject to change without notice.

Model	Dimensions							Weight
	A	B		C	D	E		
		AM/FR/VAV	MUA			AM/FR/VAV	MUA	
TT0510	38	108	108	34.8125	-	-	-	187.27
TT1025	56	119	119	52.8125	-	-	-	230.93
TT1530	61	129	129	57.8125	-	-	-	251.03
TT2035	67	136	136	63.8125	-	-	-	269.41
TT2545	74	139	139	70.8125	-	-	-	284.92
TT3060	92	153	153	88.8125	57	96	96	330.88
TT3580	102	157	157	98.8125	61	96	96	352.71
TT4095	109	161	161	105.8125	65	96	96	370.52
TT5515	128	175	166	124.8125	79	96	87	419.34

ROOF CURB DUCT ADAPTER

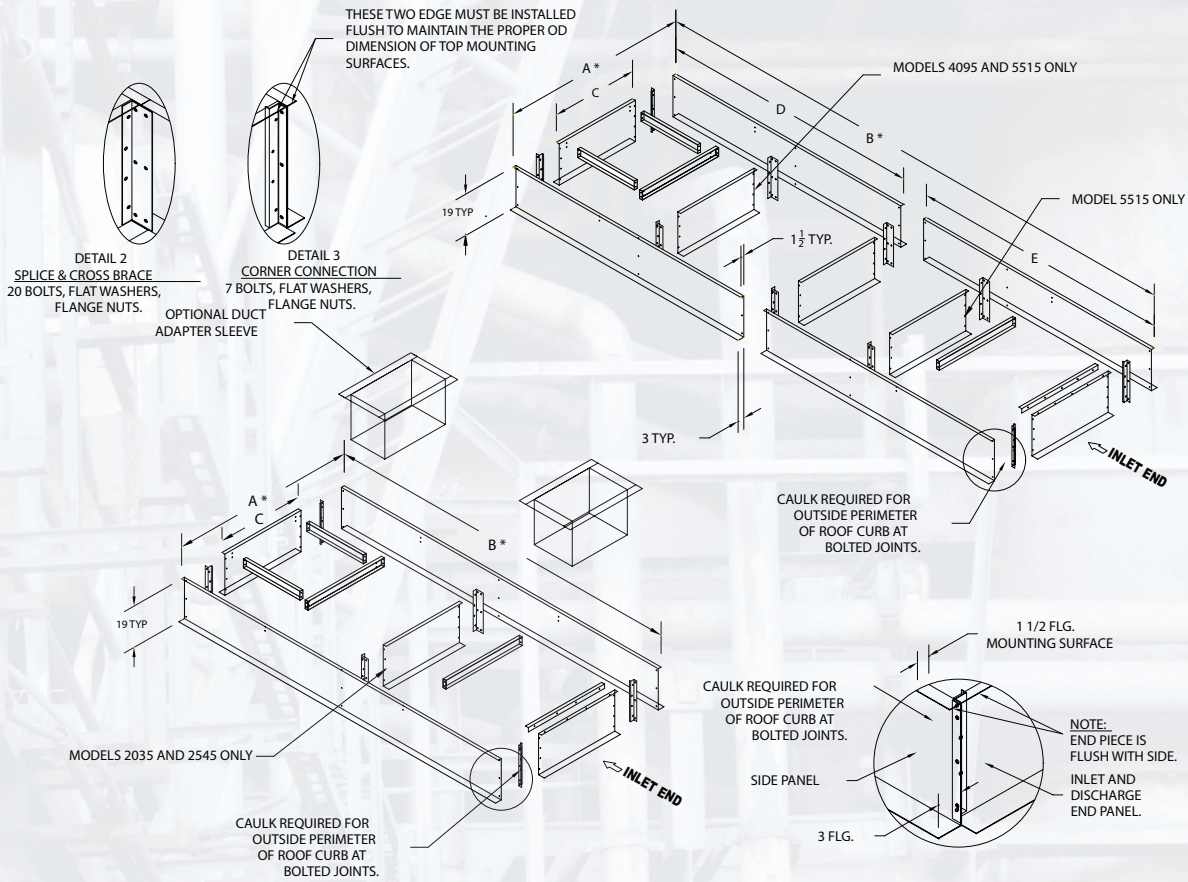

IMPORTANT NOTES:

- All dimensions are in inches.
- All weights are in pounds.
- All dimensions and weights are subject to change without notice.
- Dimensions shown for fan/burner section only.
- Roof curb is shipped knocked down.

Model	Dimensions							Weight	
	A	B		C	D	E		AM/FR/VAV	MUA
		AM/FR/VAV	MUA			AM/FR/VAV	MUA		
TT0510	38	108	108	34.8125	-	-	-	207	198
TT1025	56	119	119	52.8125	-	-	-	255	245
TT1530	61	129	129	57.8125	-	-	-	279	268
TT2035	67	136	136	63.8125	-	-	-	300	288
TT2545	74	139	139	70.8125	-	-	-	318	305
TT3060	92	153	153	88.8125	58	95	95	382	361
TT3580	102	157	157	98.8125	52	95	95	408	386
TT4095	109	161	161	105.8125	66	95	95	428	404
TT5515	128	175	166	124.8125	81	95	85	487	459

This product is not for residential use.
This document is intended to assist licensed professionals in the exercise of their professional judgment.

Weather-Rite
1100 Seven Mile Road NW
Comstock Park, MI 49321
Telephone: +1.616.784.0500
www.weather-rite.com

Z83.4 100% OUTSIDE AIR (US & CANADA)
Z83.18 - RECIRCULATION (US)

C ETL LISTED US
Intertek
GAS HEATING ONLY

© 2021 Specified Air Soulutions
All rights reserved. No part of this work covered by the copyrights herein may be reproduced or copied in any form or by any means – graphic, electronic, or mechanical, including photocopying, recording, taping, or information storage and retrieval systems – without written permission of Specified Air Solutions.

Printed in U.S.A. WRTTDSGNA 0821 Rev D