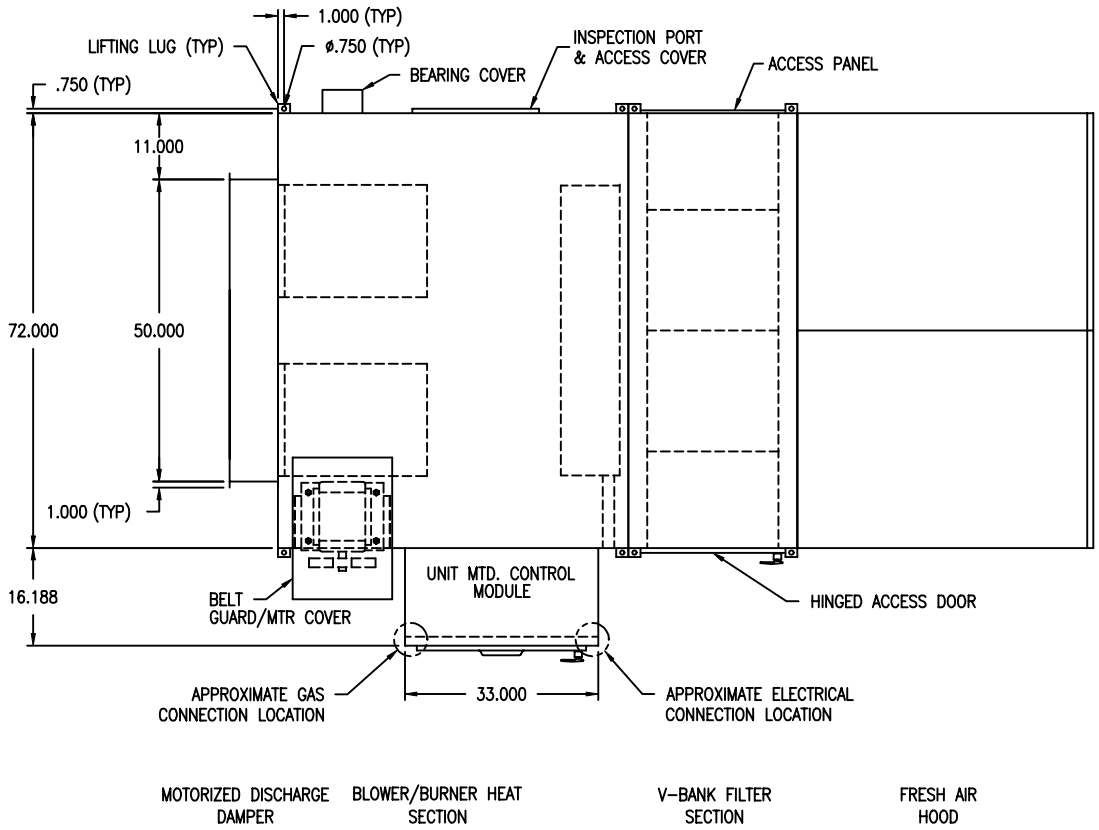

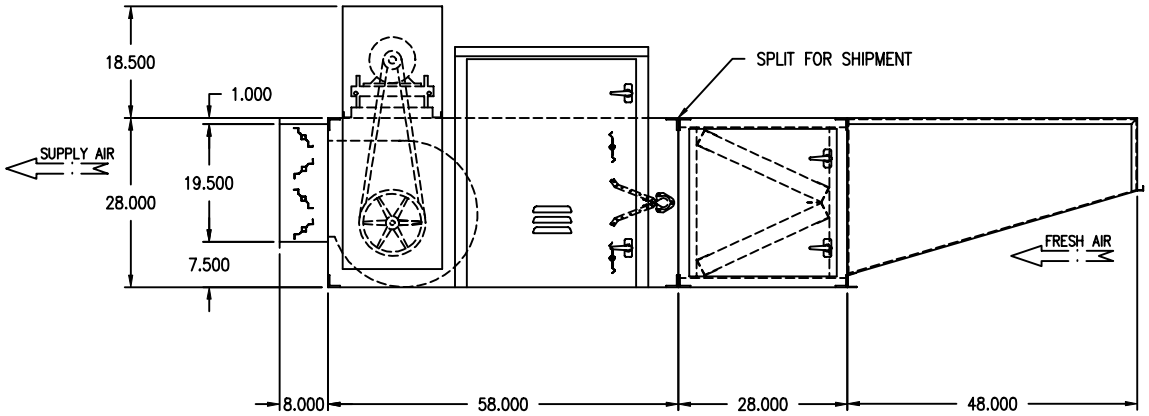

MODEL

AirRite TT Series 215 HHL Outdoor

STANDARD FEATURES

TESTED TO ANSI Z83.4 & Z83.18
MAXITROL TEMPERATURE CONTROL SYSTEM
ELECTRONIC FLAME SUPERVISION
FACTORY TESTED
16 GAUGE CRS CASING
(2) 15" DWDI FORWARD CURVED BLOWER
UNIT MTD CONTROL MODULE
LUBRICATED BEARINGS W/ ZIRK FITTINGS
BELT GUARD (PER OSHA STANDARDS)
AIR PROVING SWITCH
AIR INLET SCREEN (OUTDOOR UNITS ONLY)
INDUSTRIAL ENAMEL EXTERIOR FINISH
HEAT & RUST RESISTANT INTERIOR FINISH
ADJUSTABLE BURNER PROFILE DAMPERS
MIDCO BURNER

IF CURB IS REQUIRED:
2" x 2" CURB ANGLE WILL BE ADDED TO BASE OF UNIT

PRELIMINARY

NOTE:
1.) DRAWING IS NOT TO SCALE.
2.) THIS SUBMITTAL ONLY APPLICABLE TO DIRECT FIRED BURNER.
3.) DUE TO SHIPPING REQUIREMENTS, SOME ELECTRICAL RECONNECTION MAY BE REQUIRED.

WEATHER-RITE
HEATING AND VENTILATION, INC.